1/2" High Sensitivity Camera

MMK-S129/S128

2MP x12 Zoom HD-SDI Motorized Zoom IR PTZ Camera



Features

- 1/2" 2MP Sony CMOS sensor
- HD-SDI, EX-SDI, CVBS
- x12 Optical Zoom(7mm~84mm) & x32 Digital Zoom
- Day & Night(ICR)
- Real-time True WDR(DOL WDR : MMK-S129)
- Digital Noise Reduction(2D+3D)
- Digital Image Stabilization
- Privacy Mask Function
- High Light Compensation
- Defog Function
- 255 Presets, 8 Tours, 8 Scans, 4 Patterns
- 360˚ Endless Panning and -8˚Tilting
- Motorized IR Zoom lens for IR intensity and distance adjustment
- IR Night Distance up to 150m
- Optically perfect flat viewing window preventing from blooming and smear
- -40˚C~+60˚C All weather High Tolerance
- Corrosion-resistant external PC housing
- Weather-proof IP66 outdoor housing
- Ease of installation and maintenance from PTZ docking cradle
- Memory Back Up Position of Pan/Tilt, Preset, ID and PTZ setting value
- Built-in Wiper

Dimensions

Unit : mm

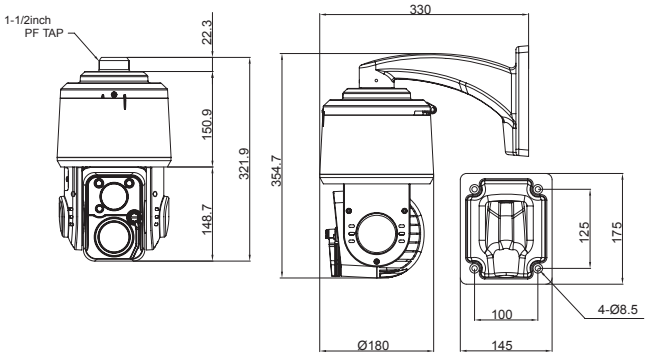

〈Wall Type〉

MODEL		MMK-S129	MMK-S128
CAMERA			
Image Sensor		1/2" Sony CMOS Sensor	
Total Pixels		1952(H) x 1113(V) = 2.17M Pixels	1952(H) x 1241(V) = 2.42M Pixels
Active Pixels		1937(H) x 1097(V) = 2.12M Pixels	1937(H) x 1097 (V) = 2.12M Pixels
Video Format		1080p@60/50fps, 1080i@60/50fps, 1080p@30/25fps, 720p@60/50fps, 720p@30/25fps	1080p@30/25fps, 720p@60/50fps, 720p@30/25fps
Min. Illumination	Color	0.01 lux / DSS 0.001 lux	0.15 lux / DSS 0.0375 lux
	BW	0.002 lux / DSS 0.0002 lux	0.01lux / DSS 0.002 lux
	IR-LED	0 lux	0 lux
S/N Ratio		more than 50dB (AGC off)	
Video Output		HD-SDI, EX-SDI, CVBS	

LENS		x12		
Lens Type		x12 Day & Night Zoom Lens		
Zoom Ratio		Optical x12, Digital x32 Zoom		
Focal Length		f = 7.0mm ~ 84mm		
Aperture Ratio		F1.5 (wide) ~ F1.9 (tele)		
Angle Of View (D, H, V)	WIDE	60.70°	54.07°	32.03°
	TELE	5.72°	4.98°	2.80°

PAN / TILT		
Pan	360°Continuous Pan, 0.1° to 120°/sec (proportional to zoom)	
Pan Speed	250°/sec, ± 0.1° Accuracy	
Tilt	-8°(352°) to 188° movement, 0.1°~80°/sec (proportional to zoom)	
Tilt Speed	250°/sec, ± 0.05° Accuracy	
Preset	255 points, less than 0.1° accuracy	

CAMERA FUNCTIONS		
Camera Title	ID / Title / Zoom Ratio / System Message	
Day & Night	Auto / Day / Night / Ext-in	
WDR/BLC	Off / WDR / BLC / HLC	
ACE	Off / Low / Middle / High	
DNR	Auto / Off / Low / Middle / High	
Defog	Off / On(Auto / Manual)	
Image Stabilization	Off / On	
Privacy Mask	Off / On (24 positions)	
Digital Slow Shutter	Off /x2 /x4 /x8 /x16 /x32	Off /x2 /x4
Gain Control	0 ~ 10 steps	Off / On
White Balance	Auto / One Push / Manual / Indoor / Outdoor	
Shutter Speed	1/30(25) ~ 1/60,000 sec	1/30(25) ~ 1/30,000 sec
E.Zoom	Off / x2 ~ x32	
Digital Flip	Off / H / V / H&V	
Digital I/O	4 alarm / 2 relay out	
Remote Control Interface	RS-422, 485	
Protocol	Pelco-D / Pelco- P / WONWOO	

GENERAL	
Power Source	AC21~26V 60Hz / 50Hz(Power adaptor not included)
Power Consumption	Operation(2A) / Max 3A
Operating Temperature	-40°C ~ +60°C / 0% ~ 90% RH
Ingress Protection	IP66, IK10
Material	Aluminum
Dimensions	180(Ø) x 321.9(H) mm
Weight	4.18Kg