SHINEUI
Shineui Entec co,. Ltd

ADD : 440-17 Cheong Cheon-Dong
Pu Pyung-Ku Inchon Korea
TEL : 82-32-503-3796 FAX : 82-32-504-0261

Reducing Valve
(BB06)

PRODUCT SPECIFICATION SHEET



FEATURES

- This valve has small noise and excellent capability of reducing pressure.
- This valve cannot exert harmful influence by scrap.

CONTENTS

Application 1
Features 1
Specifications ..... 1~2
Dimensions 2

APPLICATION

This valve have application to soft water equipment and hot water equipments etc.
This valve is used in machinery protection, and reduces very high pressure.

SPECIFICATIONS

Installation	: Vertical and horizontal	
Ambient temperature	: 0 ~ 60℃	
Permissible fluid temperature	: 0 ~ 60℃(It shall not be frozen)	
Material	: Body(Up)	NY66(G/F 30%)
	Body(Down)	NY66(G/F 30%)
	Diaphragm	NBR with cloth
	Spring	SUS304

www.shineui.co.kr shineui@shineui.co.kr

SPECIFICATIONS

Common use pressure	: 0.2 ~ 10.0 kgf/cm^2	
Withstand pressure	: 17.5 kgf/cm^2 (1 min)	
Operating pressure	: P1(Inlet pressure)	: P2(Outlet pressure)
	10.0 kgf/cm^2	3.0 kgf/cm^2 ±0.3

DIMENSIONS

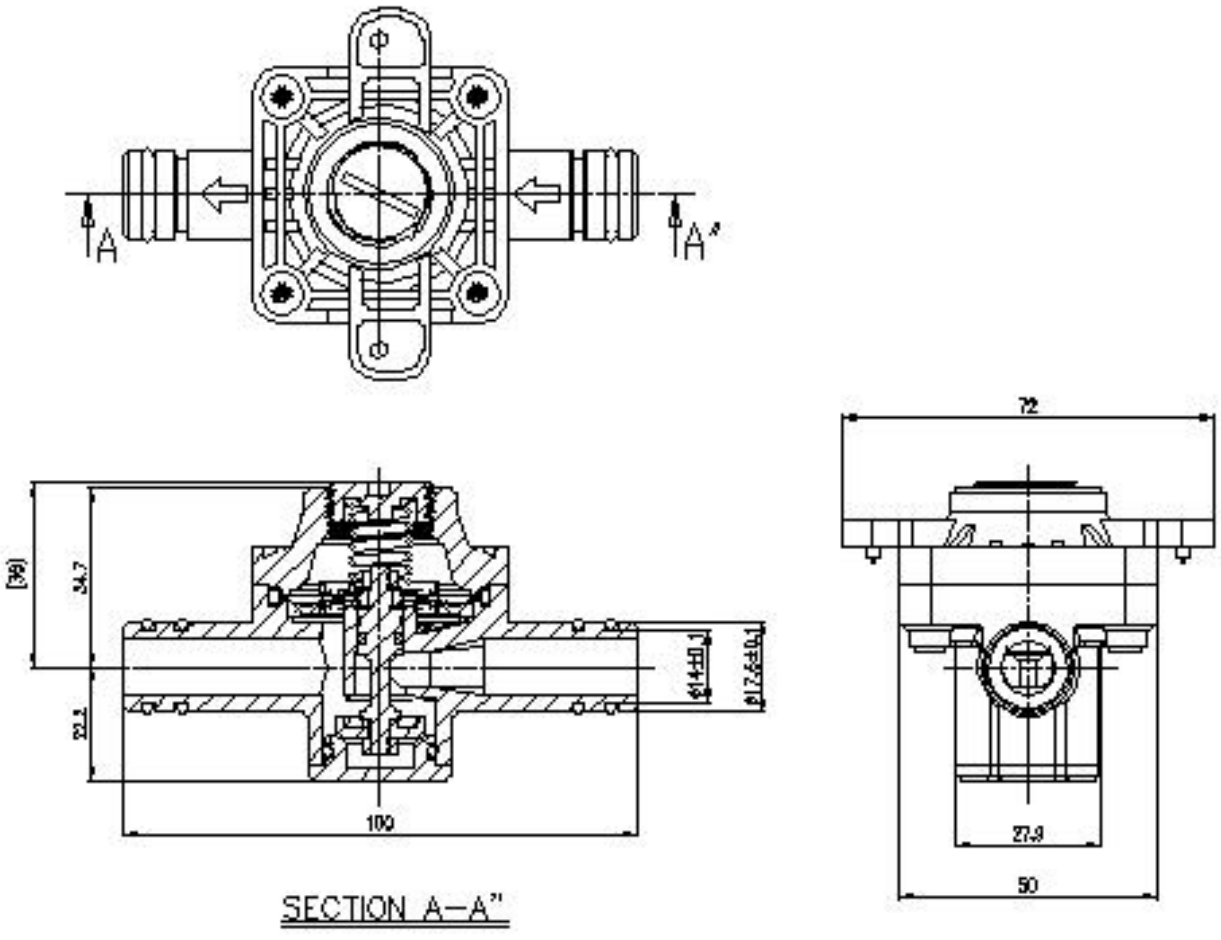

Fig 1. Pressure reducing valve

The specifications and dimensions can be changed without warning

www.shineui.co.kr shineui@shineui.co.kr