surgeZERO : Class II / SZ040-XXX



▲ 1P2W



▲ 3P3W

- LED 동작상태 표시 기능
- 각 상별 서지 카운터 (Option)
- Mov Fault Alarm 기능 (Option)

- LED indicators for fault and Power
- Surge counter is option
- Remote contact is option

Technical data

Model		SZ040-XXX			
Electrical characteristics		120S	220S	220D	440D
Max. continuous operating voltage	U_C	150V	320V	150V	320V
Nominal discharge current (8/20)	I_n (L/N-PE)	20kA	20kA	20kA	20kA
Max. discharge current (8/20)	I_{max} (L/N-PE)	40kA	40kA	40kA	40kA
Voltage Protection level at In	U_p	〈1.5kV	〈2kV	〈1.5kV	〈2kV
Response time	tA (L/N-PE)	〈25ns	〈25ns	〈25ns	〈25ns
Thermal protection	(L/N-PE)	Yes	Yes	Yes	Yes
Short-circuit withstand current	I_{SCCR} (L/N-PE)	100kA	100kA	100kA	100kA

Mechanical characteristics	120S	220S	220D	440D
Temperature range	-40℃~+80℃			
Mounting	4xM4 Bolt			
Degree of protection	IP20			
Housing material	Steel			
Indication of disconnector operation	Red LED (ON)			
Remote contacts (RC)	Yes (Option)			
Contact ratings	AC 250V/1A, 125V/2A			
Conductor size	≥6mm²			

Ordering Guidelines

SZ040-□□□-□-□ (A / B / C)

A : Nominal voltage	B : Phase / Wire	C : Option
120 : 120Vac	S : 1ϕ2W	E : Standard
220 : 220Vac	D : 3ϕ3W	C : Counter
380 : 380Vac	Y : 3ϕ4W	R : Relay contact
440 : 440Vac		
480 : 480Vac		

SZ040-XXX-S 1P2W

Dimension

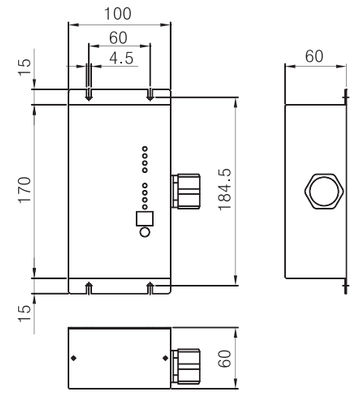

Internal configuration

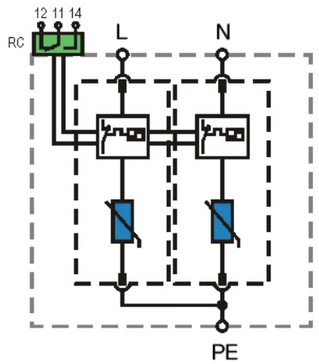

SZ040-XXX-D 3P3W

Dimension

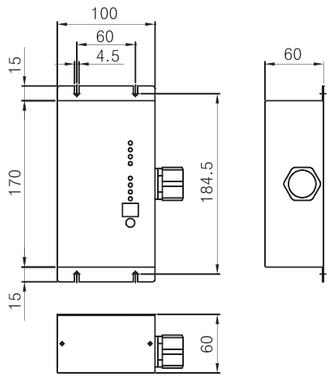

Internal configuration

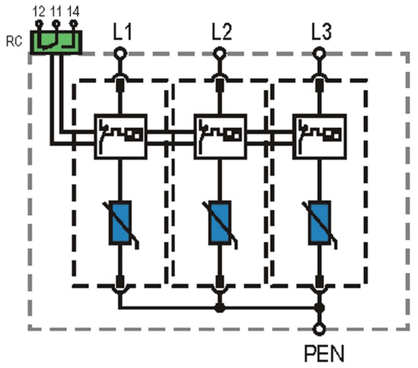

surgeZERO : Class II / SZ040-XXX



▲ 3P4W

- LED 동작상태 표시 기능
- 각 상별 서지 카운터 (Option)
- Mov Fault Alarm 기능 (Option)

- LED indicators for fault and Power
- Surge counter is option
- Remote contact is option

Technical data

Model		SZ040-XXX		
Electrical characteristics		208Y	380Y	480Y
Max. continuous operating voltage	U_C	150V	320V	385V
Nominal discharge current (8/20)	I_n (L/N-PE)	20kA	20kA	20kA
Max. discharge current (8/20)	I_{max} (L/N-PE)	40kA	40kA	40kA
Voltage Protection level at In	U_p	〈1.5kV	〈2kV	〈2.5kV
Response time	tA (L/N-PE)	〈25ns	〈25ns	〈25ns
Thermal protection	(L/N-PE)	Yes	Yes	Yes
Short-circuit withstand current	I_{SCCR} (L/N-PE)	100kA	100kA	100kA

Mechanical characteristics	208Y	380Y	480Y
Temperature range	-40℃~+80℃		
Mounting	4xM4 Bolt		
Degree of protection	IP20		
Housing material	Steel		
Indication of disconnector operation	Red LED (ON)		
Remote contacts (RC)	Yes (Option)		
Contact ratings	AC 250V/1A, 125V/2A		
Conductor size	≥6mm²		

Ordering Guidelines

SZ040-□□□-□-□
(A / B / C)

A : Nominal voltage	B : Phase / Wire	C : Option
120 : 120Vac	S : 1ϕ2W	E : Standard
220 : 220Vac	D : 3ϕ3W	C : Counter
380 : 380Vac	Y : 3ϕ4W	R : Relay contact
440 : 440Vac		
480 : 480Vac		

SZ040-XXX-Y 3P4W

Dimension

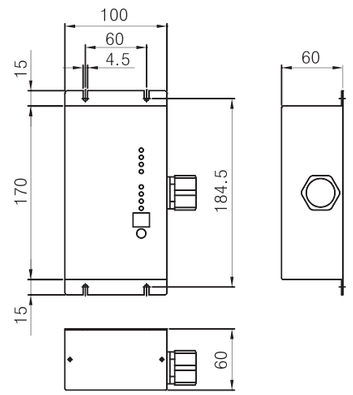

Internal configuration

