Circular Combination Switch
ESC Series

Wet Locations
NEMA 3,3R,4,4X,7,9

❖ Type of Explosion-proof
Flameproof (Ex d IIC T6 IP55)

◎ **Rating** : Max. 250 Volt, Max. 5 Ampere.

❖ 1 Gang



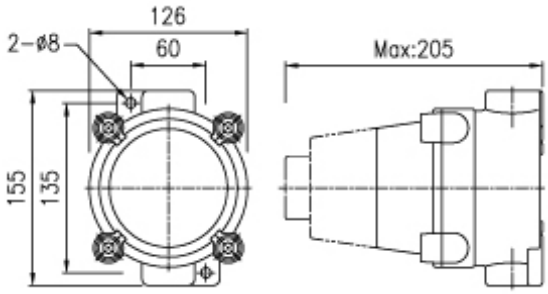

No. of Gangs	Unit Arrangement							Catalog Number	
	Meter	Pilot Lamp		Cam Switch	Selector Switch	Push Button		Wall Mounting	Standing Type
		Single	Double			Single	Double		
1 Gang	○							ESC 101	ESC 101T
		○						ESC 102	ESC 102T
			○					ESC 103	ESC 103T
				○				ESC 104	ESC 104T
					○			ESC 105	ESC 105T
						○		ESC 106	ESC 106T
							○	ESC 107	ESC 107T

* Emergency Switch Unit and Buzzer Unit are order made.

❖ 2 Gang



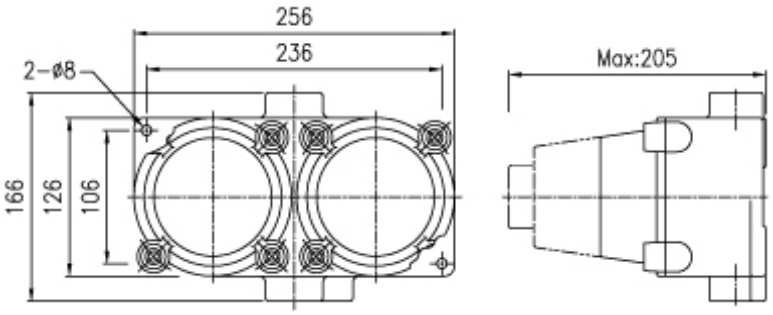

No. of Gangs	Unit Arrangement							Catalog Number		
	Meter	Pilot Lamp		Cam Switch	Selector Switch	Push Button		Wall mounting		Standing
		Single	Double			Single	Double	Horizontal	Vertical	Vertical
2 Gang	○		○					ESC 201	ESC 201V	ESC 201T
	○				○			ESC 202	ESC 202V	ESC 202T
	○						○	ESC 203	ESC 203V	ESC 203T
		○			○			ESC 204	ESC 204V	ESC 204T
		○				○		ESC 205	ESC 205V	ESC 205T
		○					○	ESC 206	ESC 206V	ESC 206T
			○		○			ESC 207	ESC 207V	ESC 207T
			○					ESC 208	ESC 208V	ESC 208T
			○○					ESC 209	ESC 209V	ESC 209T
				○		○		ESC 210	ESC 210V	ESC 210T
					○	○		ESC 211	ESC 211V	ESC 211T
					○		○	ESC 212	ESC 212V	ESC 212T
					○○			ESC 213	ESC 213V	ESC 213T
						○		ESC 214	ESC 214V	ESC 214T
							○○	ESC 215	ESC 215V	ESC 215T

* Emergency Switch Unit and Buzzer Unit are order made.

Copyright by NAMBUK Electric Co., LTD. 2004

❖ 3 Gang



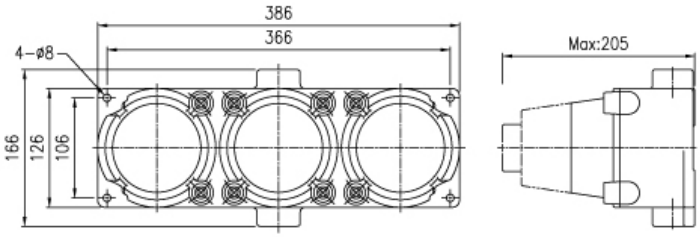

No. of Gangs	Unit Arrangement							Catalog Number		
	Meter	Pilot Lamp		Cam Switch	Selector Switch	Push Button		Wall mounting		Standing
		Single	Double			Single	Double	Horizontal	Vertical	Vertical
3 Gang	○	○			○			ESC 301	ESC 301V	ESC 301T
	○	○					○	ESC 302	ESC 302V	ESC 302T
	○	○	○		○			ESC 303	ESC 303V	ESC 303T
	○			○			○	ESC 304	ESC 304V	ESC 304T
	○				○		○	ESC 305	ECS 305V	ECS 305T
		○		○			○	ESC 306	ESC 306V	ESC 306T
		○			○	○		ESC 307	ESC 307V	ESC 307T
		○			○		○	ESC 308	ESC 308V	ESC 308T
			○		○		○	ESC 309	ESC 309V	ESC 309T
			○			○	○	ESC 310	ESC 310V	ESC 310T

* Emergency Switch Unit and Buzzer Unit are order made.

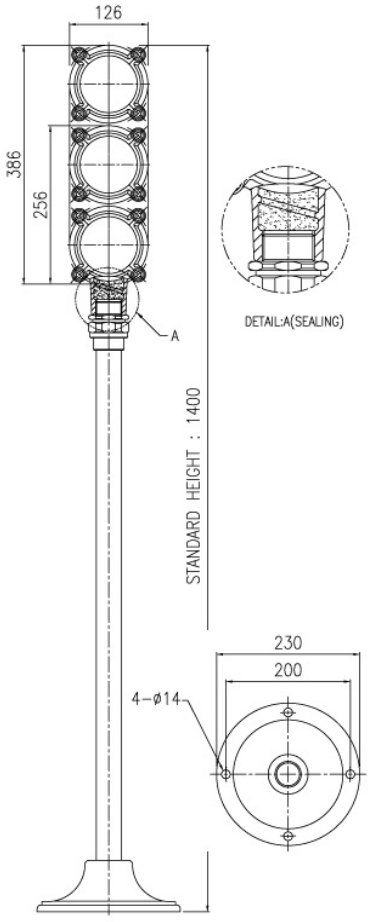

Standing Type

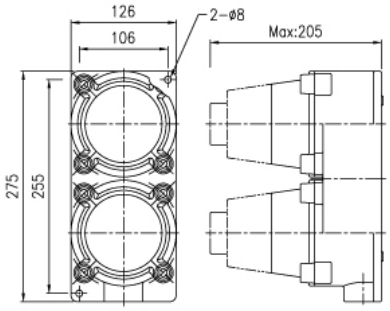

2 Gang Vertical Type

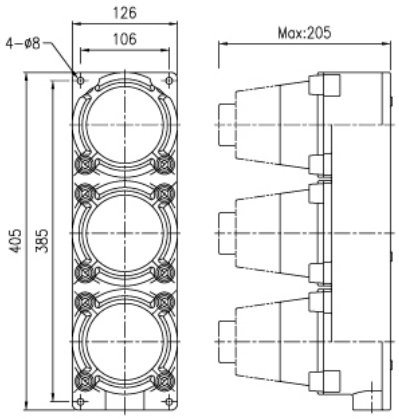

3 Gang Vertical Type

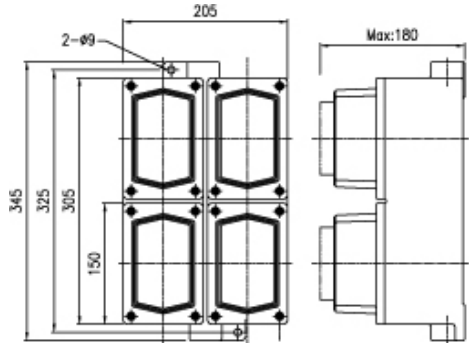

<4 Gang Type>

* ESC 4 Gang is order made.
Contact us please.

❖ Ordering Information

ESC	2	14	V
①	②	③	④

① Flameproof ESC Combination Stations

② Gang number
- 100 Series : 1 Gang
- 200 Series : 2 Gang
- 300 Series : 3 Gang
- 400 Series : 4 Gang (Order made)

③ Combination Type

④ Style Type
- None : Wall Mounting Horizontal Type
- V : Wall Mounting Vertical Type
- T : Standing Vertical Type

Copyright by NAMBUK Electric Co., LTD. 2004