www.hkvalve.net



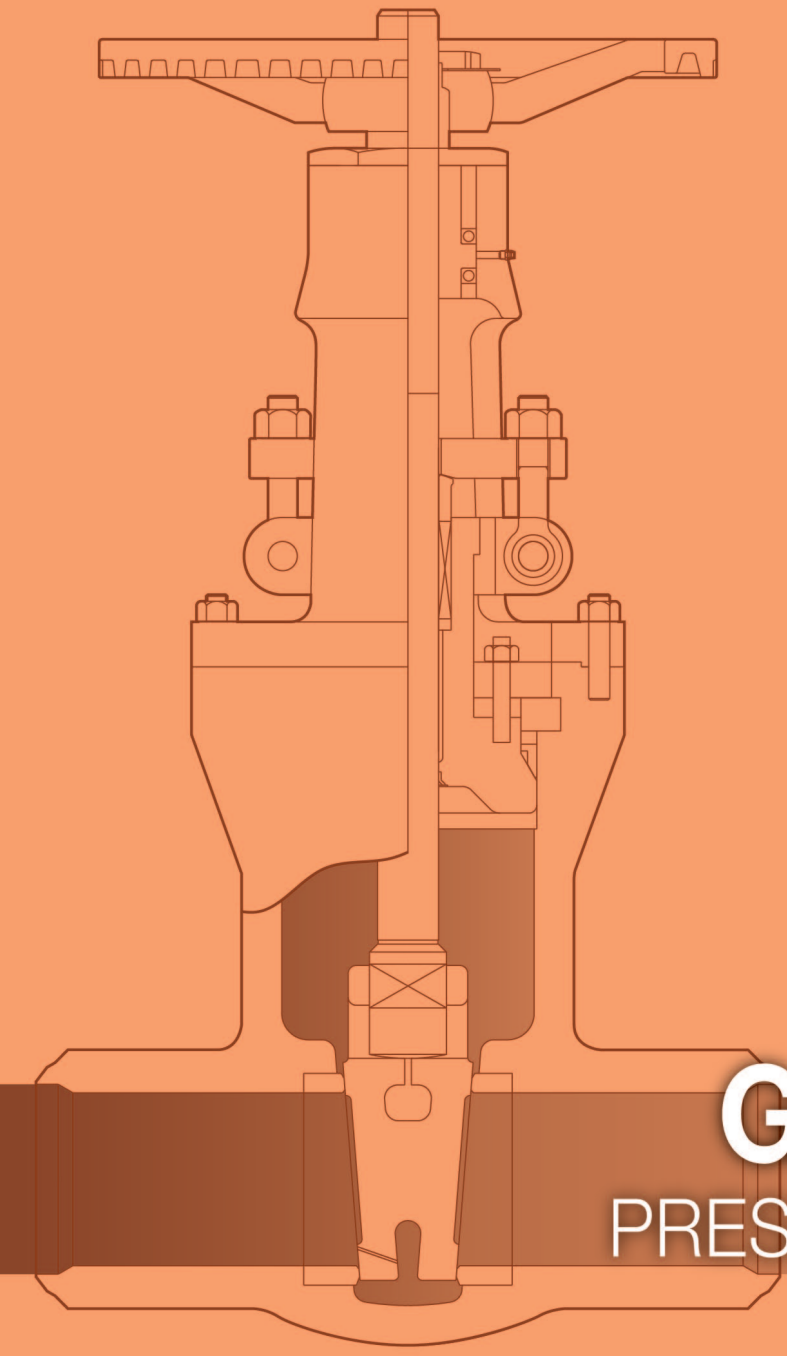

GATE VALVES

PRESSURE SEAL BONNET

CAST STEEL
GATE VALVES PRESSURE SEAL BONNET

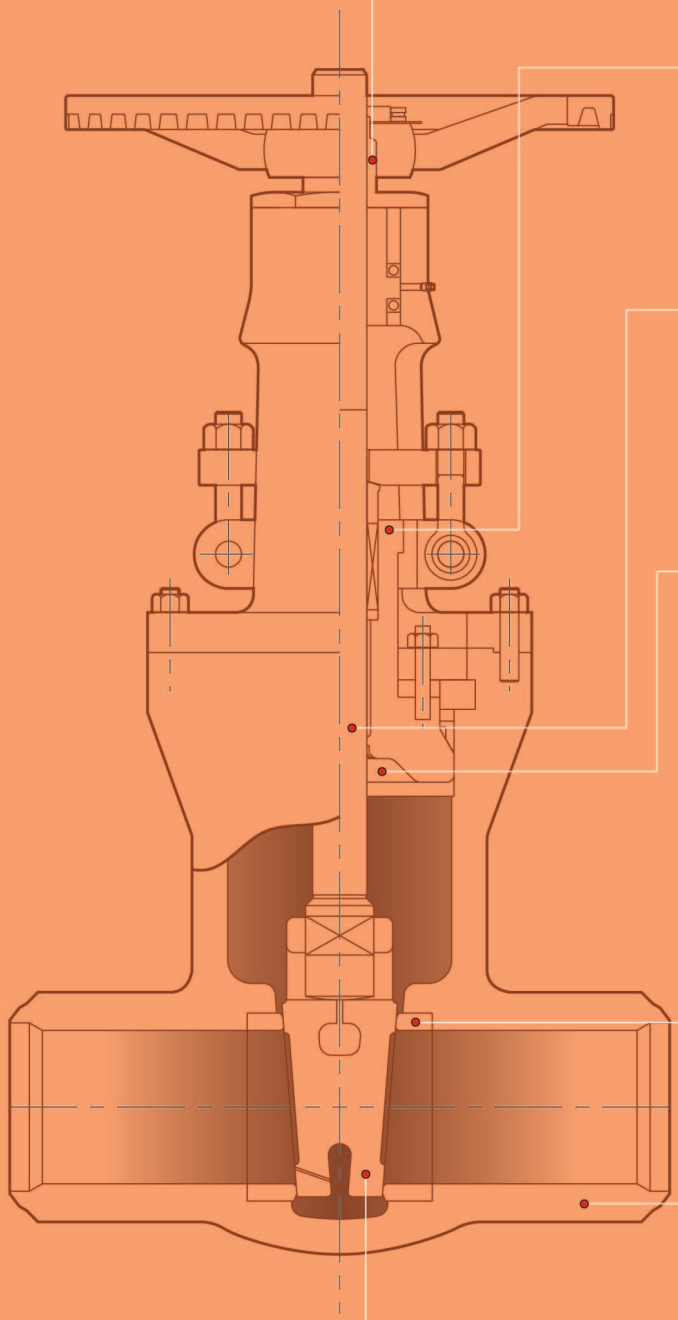

STEM NUT
The upper portion of the Yoke Sleeve is hexagonally tapered to fix the hand wheel. The standard material of the Yoke Sleeve is Nodular Ni-resist D2 with over a 1150 C (2100 F) dissolution point in accordance with API Std. Specifications.

BONNET
The bonnet is of a steel forging identical to the body to insure high reliability. The bonnet has a perfect body-bonnet seal and both ease of dismantling and reassembly are endured, The bodies and bonnets of the valve are machined by special purpose machines to achieve perfect coaxially and eliminate any misalignment which may damage the stems.

STEM
The machined forged stem comes with a T-shape head, which connects the slot of the wedge. The contacting surface of the head is spherically shaped, thereby giving it greater strength and durability. It is heat treated to give it adequate mechanical properties and surface hardness. Accurate machining and lapping insure minimized friction during opening and shutting.

BACK SEAT
All of our valves are provided with positive backseat, and packing replacement can be done with the valve fully open. The conical seat and the guide are integrally stellite faced.

SEAT RING
The Stellite 6 surface of the seat ring is integrally applied to the body by means of welding in all valve sizes.
Lapping applied to the seating surface ensures perfect mating surface ensure perfect mating with the wedge surface.

BODY
The valve body is cylindrically shaped prevent distortion or undue stress during extreme working conditions. In addition, adequate padding helps to achieve a sound cast structure in critical area. The wall thickness is greater than, or in accordance with API, ANSI and ASME requirements. The contact surfaces ensure that a minimum specific pressure is achieved. The area contacting the pressure seal gasket has a stainless steel 18/8 inlay to eliminate corrosion or wire drawing and to insure easy dismantling at all times. The close tolerances of the inside diameter of this area are attained by accurate machining and honing finish.

FLEXIBLE WEDGE
The flexible wedge designed to absorb thermally-induced body distortion, thereby making it ideal for high temperature steam or water supply piping. A Stellite 6 layer is applied to the seating surface, and this deposit is subjected to special heat treatment to secure required hardness and soundness.
The lapped finish then insure perfect mating with the seats.

CAST STEEL

NO	NAME OF PART	ASTM SPECIFICATION						
		STANDARD	HIGH TEMPERATURE SERVICE				LOW TEMP. SERVICE	
1	BODY	A216-WCB	A217-WC1	A217-WC6	A217-WC9	A217-C5	A352-LCB	A352-LC1/LC2/LC3
2	BONNET	A216-WCB	A217-WC1	A217-WC6	A217-WC9	A217-C5	A352-LCB	A352-LC1/LC2/LC3
3	DISC	A216-WCB+HF	A217-WC1+HF	A217-WC6+HF	A217-WC9+HF	A217-C5+HF	A352-LCB+304	A352-LC1/LC2/LC3
4	BODY SEAT RING	A105+HF	A182-F1	A182-F11	A182-F22	A182-F5a	A182-F304	A182-F304
5	STEM	A276-410	A276-410	A276-410	A276-410	A276-410	A276-304	A276-304
8	PACKING GLAND	A276-410	A276-410	A276-410	A276-410	A276-410	A276-304	A276-304
9	GLAND FLANGE	A105/A283-D	A105/A283-D	A105/A283-D	A105/A283-D	A105/A283-D	A105/A283-D	A105/A283-D
10	YOKE SLEEVE	A439-D2	A439-D2	A439-D2	A439-D2	A439-D2	A439-D2	A439-D2
11	BONNET BOLT	A193-B7	A193-B7	A193-B16	A193-B16	A193-B16	A320-L7	A320-L7
12	BONNET NUT	A194-2H	A194-2H	A194-4	A194-4	A194-4	A194-4	A194-4
13	GLAND BOLT	A307-B	A307-B	A307-B	A307-B	A307-B	A307-B	A307-B
14	GLAND NUT	A307-B	A307-B	A307-B	A307-B	A307-B	A307-B	A307-B
26	YOKE	A216-WCB	A216-WCB	A216-WCB	A216-WCB	A216-WCB	A216-WCB	A216-WCB
27	YOKE BOLT	A193-B7	A193-B7	A193-B7	A193-B7	A193-B7	A193-B7	A193-B7
28	YOKE NUT	A194-2H	A194-2H	A194-2H	A194-2H	A194-2H	A194-2H	A194-2H
32	PACKING WASHER	A276-410	A276-410	A276-410	A276-410	A276-410	A276-304	A276-304
33	RETAINER	A240-304	A240-304	A240-304	A240-304	A240-304	A240-304	A240-304
34	HINGE CLAMP	A216-WCB	A216-WCB	A216-WCB	A216-WCB	A216-WCB	A216-WCB	A216-WCB
35	BONNET CLAMP	A108-1045	A108-1045	A108-1045	A108-1045	A108-1045	A108-1045	A108-1045
37	GASKET SPACER	A276-410	A276-410	A276-410	A276-410	A276-410	A276-410	A276-410

NO	NAME OF PART	ASTM SPECIFICATION
15	**HANDLE NUT**	STEEL
16	**SET SCREW**	STEEL
17	**SLEEVE GLAND**	STEEL
19	**HANDWHEEL**	A395
21	**PACKING**	SEE PAGE 63
22	**GASKET**	SEE PAGE 63
23	**GREASE NIPPLE**	STEEL
29	**BEARING**	COMMERCIAL



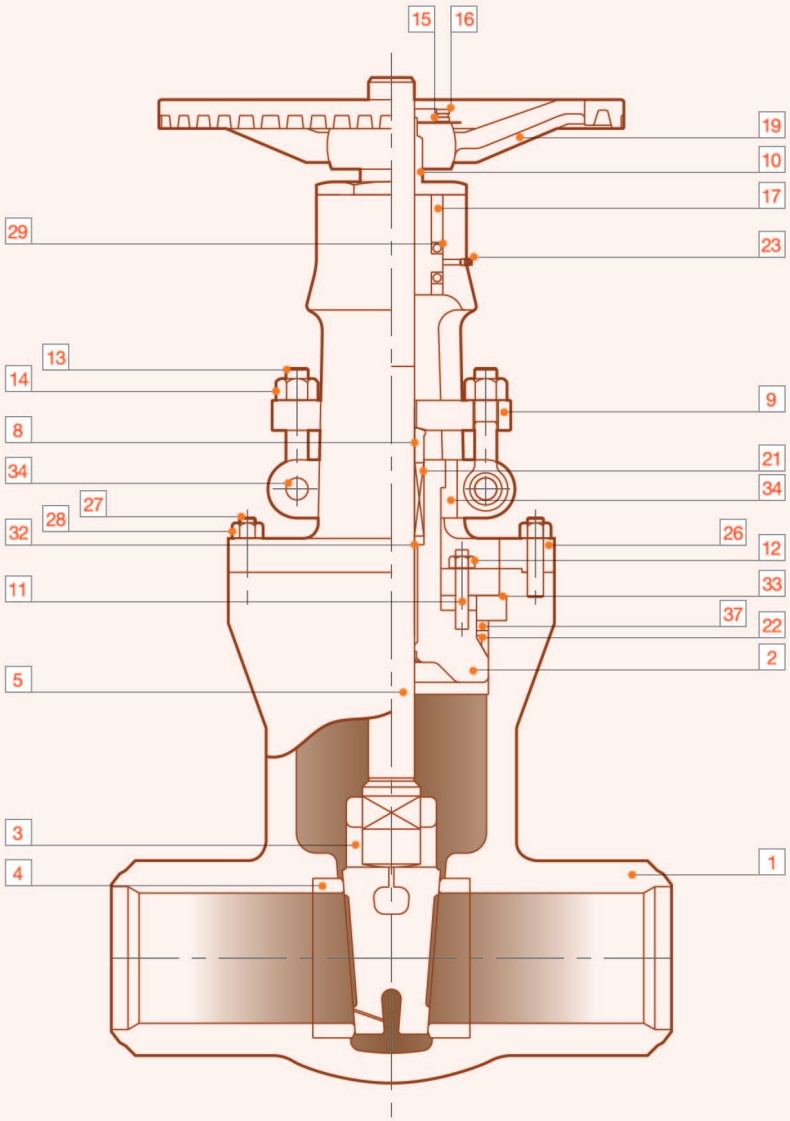

ASME CLASS 600LB

GATE VALVES
PRESSURE SEAL BONNET
CAST STEEL

VALVE SIZE		2	2 1/2	3	4	6	8	10	12	14	16	18	20	24
		50	65	80	100	150	200	250	300	350	400	450	500	600
L3	inch	7.0	8.5	10.0	12.0	18.0	23.1	28.0	32.0	35.0	39.0	43.0	47.0	55.0
	mm	178	216	254	305	457	584	711	813	889	991	1092	1194	1397
L2	inch	11.62	13.12	14.12	17.12	22.12	26.12	31.12	33.12	35.12	39.12	43.12	47.25	55.38
	mm	295	333	359	435	562	664	791	841	892	994	1095	1200	1407
L1	inch	11.5	13.0	14.0	17.0	22.0	26.0	31.0	33.0	35.0	39.0	43.0	47.0	55.0
	mm	292	330	356	432	559	660	787	838	889	991	1092	1194	1397
H	inch	23.2	24.8	26.3	36.0	42.5	49.9	59.5	70.5	73.1	85.4	88.6	97.2	118.1
	mm	590	629	667	914	1080	1267	1511	1791	1857	2162	2251	2470	3000
W	inch	7.9	93.8	9.8	11.8	19.7	22.0	272.2	35.8	24.0	24.0	24.0	24.0	30.0
	mm	200	250	250	300	500	560	690	610	610	910	610	610	760
L	inch	-	-	-	-	-	-	-	17.0	17.0	20.2	20.2	20.2	21.8
	mm	-	-	-	-	-	-	-	432	432	512	512	512	554
WEIGHT	LB	154.4	209.5	220.5	326.3	540.2	705.6	948.2	1135.6	1477.4	2535.8	2535.8	3186.2	4586.4
	Kg	70	95	100	148	245	320	430	515	670	1150	1150	1445	2080

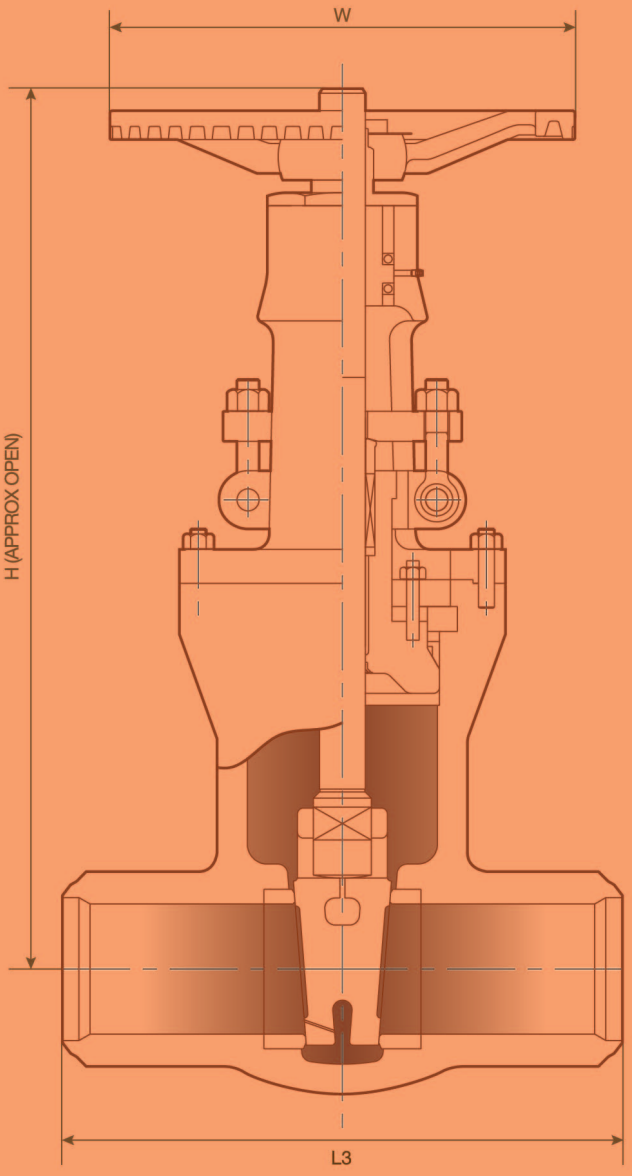

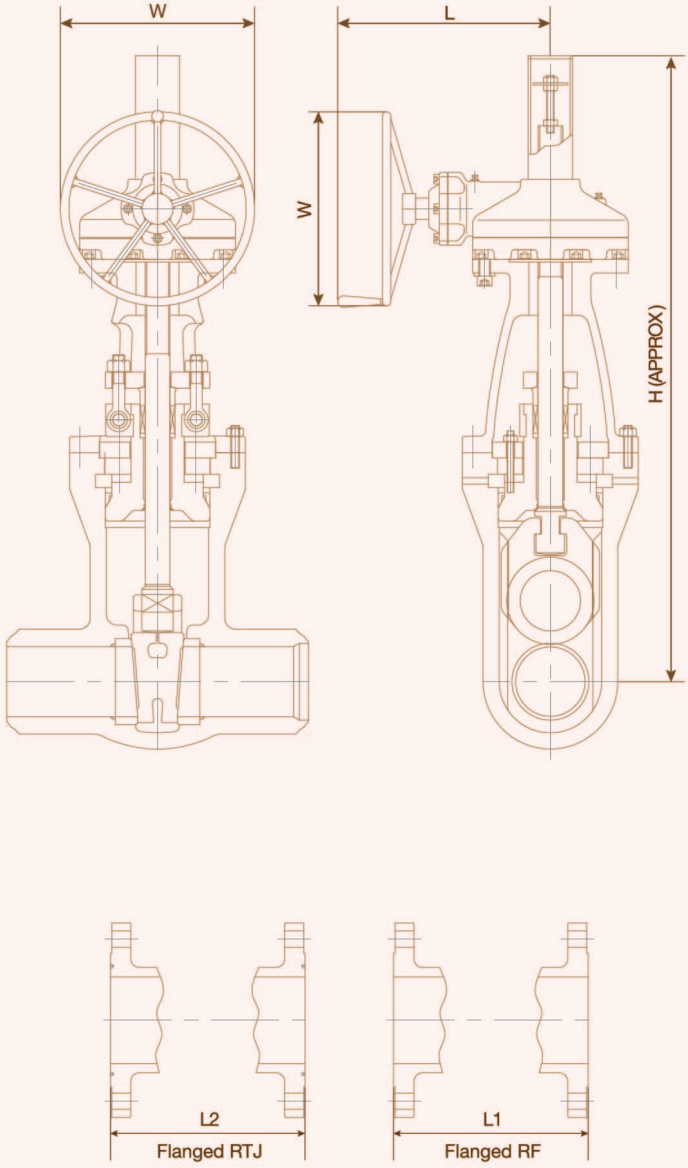

ASME CLASS 900LB

GATE VALVES
PRESSURE SEAL BONNET
CAST STEEL

VALVE SIZE		2	2 1/2	3	4	6	8	10	12	14	16	18	20	24
	mm	50	65	80	100	150	200	250	300	350	400	450	500	600
L3	inch	8.5	10.0	12.0	14.0	20.0	26.0	31.0	36.0	39.0	43.0	46.5	50.5	59.5
	mm	216	254	305	356	508	660	787	914	991	1092	1181	1283	1511
L2	inch	14.62	16.62	15.12	18.12	24.12	29.12	33.12	38.12	40.88	44.88	48.5	52.5	61.75
	mm	371	422	384	460	613	740	841	968	1038	1140	1232	1334	1568
L1	inch	14.5	165.5	15.0	18.0	24.0	29.0	33.0	38.0	40.5	44.5	48.0	52.0	61.0
	mm	368	419	381	457	610	737	838	965	1029	1130	1219	1321	1549
H	inch	23.4	29.6	29.8	34.0	39.9	50.2	60.7	70.1	79.8	89.0	97.2	108.3	1276.6
	mm	594	753	756	864	1013	1276	1543	1781	2026	2261	2470	2750	3242
W	inch	11.8	17.7	17.7	19.7	220	18.1	24.0	24.0	24.0	24.0	29.9	29.9	24.0
	mm	300	450	450	500	560	460	610	610	610	610	760	760	610
L	inch	-	-	-	-	-	116.8	17.0	20.2	20.2	20.2	21.8	21.8	20.1
	mm	-	-	-	-	-	427	432	512	512	512	554	554	512
WEIGHT	LB	132.3	207.3	224.9	330.8	617.4	1455.3	2116.8	2976.8	3748.5	5292	7320.6	9702.0	14927.9
	Kg	60	94	102	150	280	660	960	1350	1700	2400	3320	4400	6770

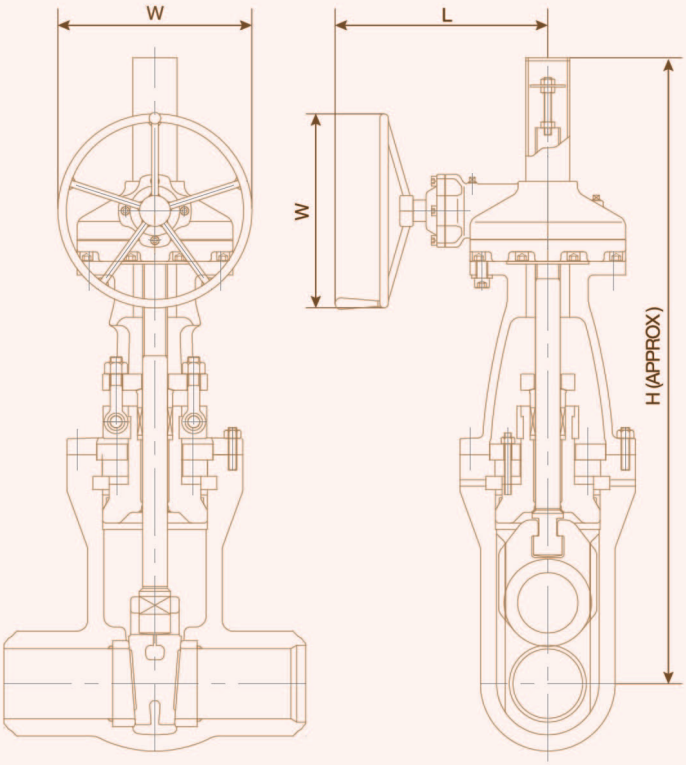

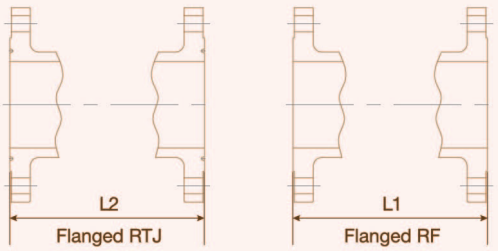

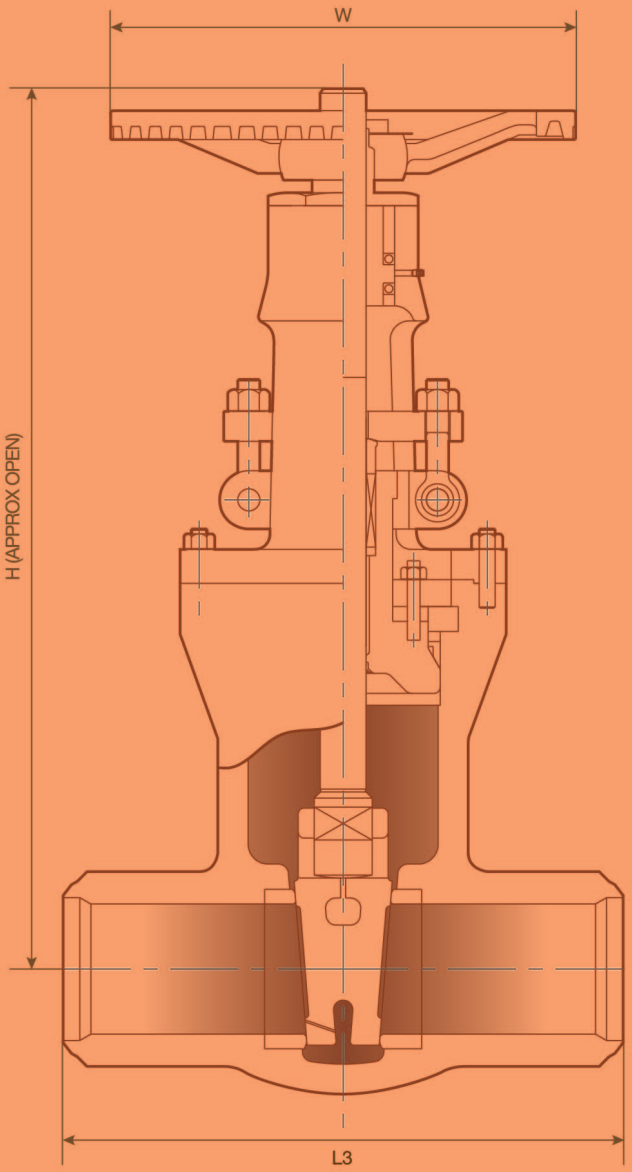

ASME CLASS 1500LB

GATE VALVES
PRESSURE SEAL BONNET
CAST STEEL

VALVE SIZE		2	2 1/2	3	4	6	8	10	12	14	16
		50	65	80	100	150	200	250	300	350	400
L3	inch	8.5	10.0	12.0	16.0	22.0	28.0	34.0	39.0	42.0	47.0
	mm	216	254	305	406	559	711	864	991	1067	1194
L2	inch	14.62	16.62	18.62	21.62	28.0	33.16	39.38	45.12	5025	55.38
	mm	371	422	473	549	711	842	1000	1146	1276	1407
L1	inch	14.5	16.5	18.5	21.5	27.75	32.75	39.0	44.5	49.5	54.5
	mm	368	419	470	546	705	832	991	1130	1257	1384
H	inch	23.4	29.6	29.6	34.0	48.2	51.6	64.8	77.8	87.2	91.8
	mm	594	753	753	864	1219	1311	1645	1975	2216	2331
W	inch	11.8	17.7	17.7	19.7	24.0	24.0	24.0	24.0	29.9	29.9
	mm	300	450	450	500	610	610	610	610	760	760
L	inch	-	-	-	-	17.0	17.0	20.2	20.0	21.8	21.8
	mm	-	-	-	-	432	432	512	512	554	554
WEIGHT	LB	132.3	207.3	264.6	458.6	1058.4	2006.6	3109.1	4586.4	5379.5	7933
	Kg	60	94	120	208	480	910	1410	2080	2650	3600

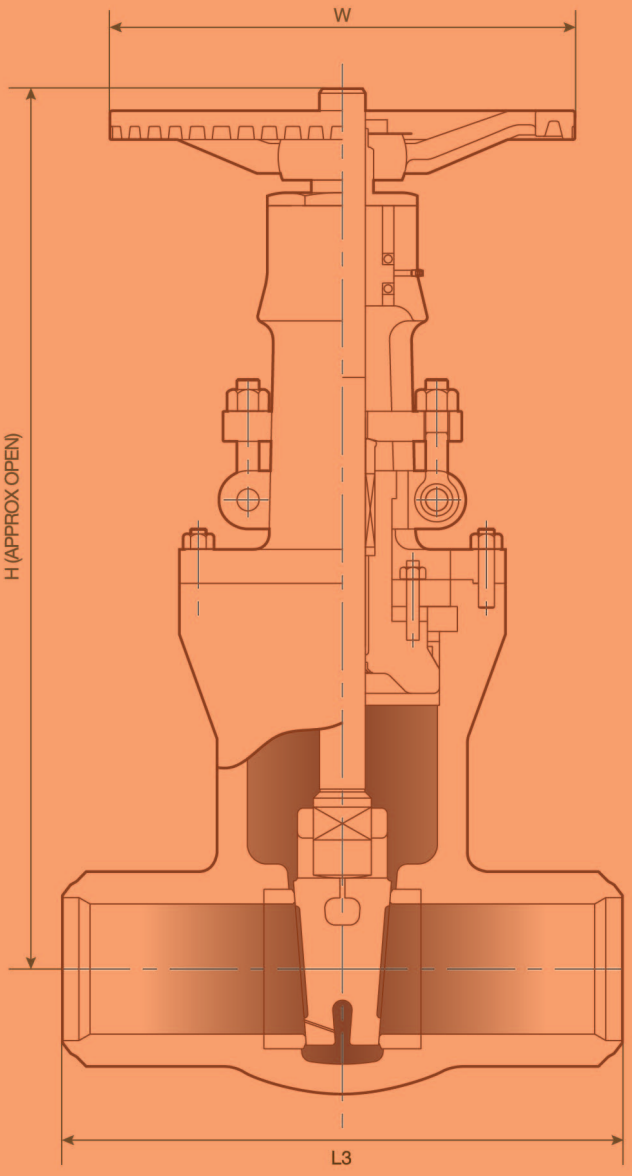

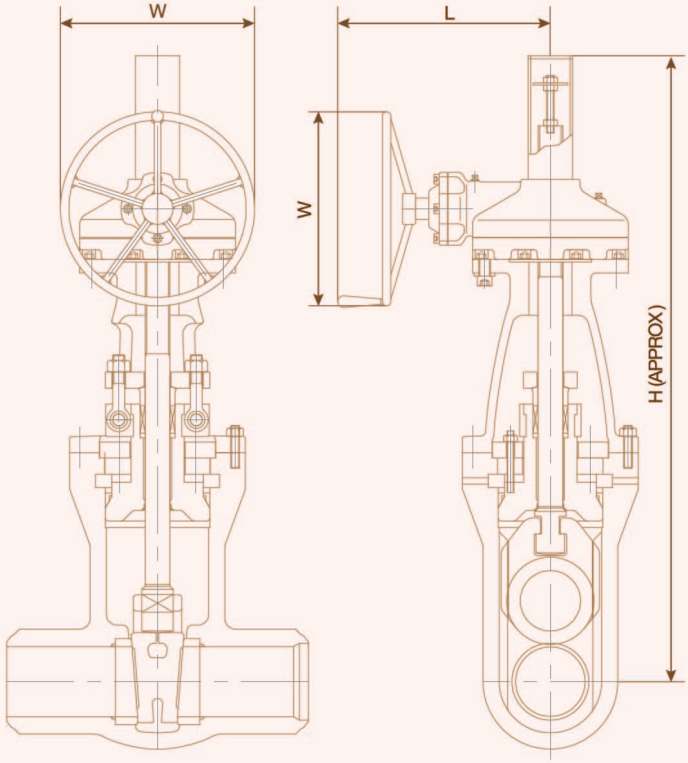

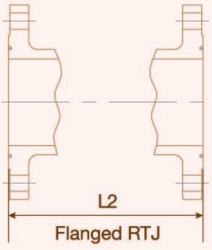

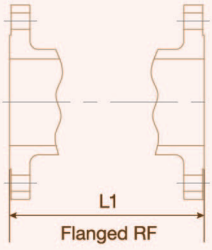

ASME CLASS 2500LB

GATE VALVES
PRESSURE SEAL BONNET
CAST STEEL

VALVE SIZE		2	2 1/2	3	4	6	8	10	12	14	16	18
		50	65	80	100	150	200	250	300	350	400	450
L3	inch	11.0	13.0	14.5	18.0	24.0	30.0	36.0	41.0	44.0	49.0	55.0
	mm	279	330	368	457	610	762	914	1041	1118	1245	1397
L2	inch	17.87	20.25	23.0	26.88	36.5	40.87	50.88	56.88	-	-	-
	mm	454	514	584	683	927	1038	1292	1445	-	-	-
L1	inch	17.75	20.0	22.75	26.5	36.0	40.25	50.0	56.0	-	-	-
	mm	451	508	578	673	914	1022	1270	1422	-	-	-
H	inch	23.4	29.6	29.6	34.3	47.3	57.1	63.4	82.5	90.2	97.2	116.1
	mm	594	753	753	870	1201	1451	1610	2096	2291	2470	2950
W	inch	14.0	17.7	19.7	23.6	24.0	24.0	24.0	29.9	29.9	24.0	24.0
	mm	355	450	500	600	610	610	610	760	76	610	610
L	inch	-	-	-	-	17.0	20.2	20.2	21.8	21.8	20.2	20.2
	mm	-	-	-	-	432	512	512	554	554	512	512
WEIGHT	LB	172.1	273.4	334.1	568.4	954.1	1806.7	2943.5	4466.0	6902.0	10353.0	11774.0
	Kg	85	135	165	280	470	890	1450	2200	3400	5100	5800

