# Loudspeaker Specification Sheet

Model Number : BH16M013L

Revision : Rev 00.
Date : 20.JUN.17

## Features:

- Driver Type : Woofer
- Size : 200mm (8inch)
- Magnet : Ferrite
- Frame : Steel
- Diaphragm : Mica White Paper



## Specifications:

- Rated Power Handling : 60W (RMS)
- Characteristic Sensitivity : 88dB ± 2dB (1W/1m)
- Nominal Impedance : 6Ω
- Free Air Resonance Frequency, fs : 70Hz ± 20%
- Frequency Range : fs ~ 10kHz ± 20%
- Voice Coil Inner Diameter : Ø35.55 (mm)
- Net Weight : 2100g (74.0oz)

## Dimensions & Mounting Information:

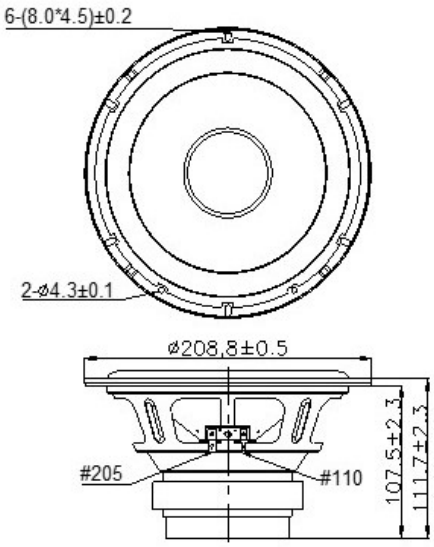


## Frequency & Impedance Response:

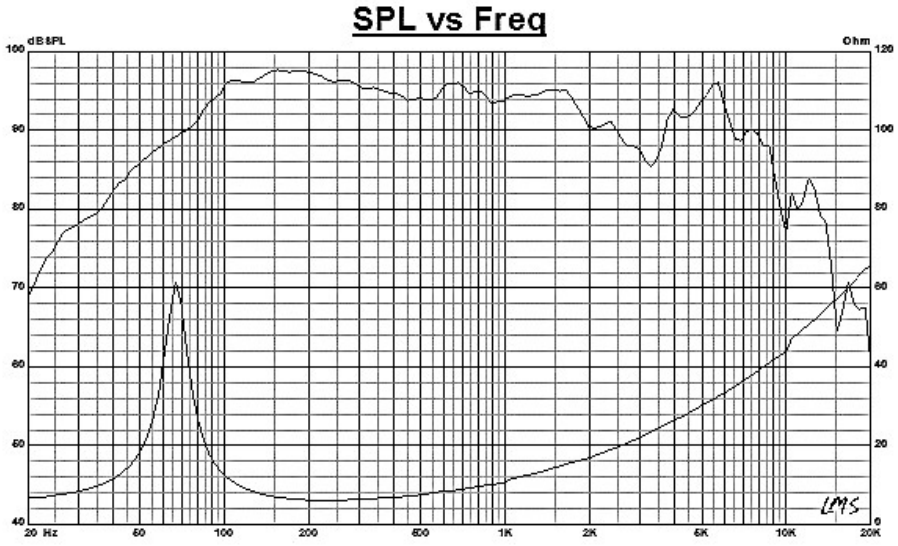


http://www.bhacoustic.com
105, Sinwon-ro, Yeongtong-gu, Suwon-si, Gyeonggi-do, Republic of Korea 16678
Tel : +82(31)-206-5477 Fax : +82-(21)-206-5473