TOPKNIT®

ISO -9001 CERTIFICATED FIRM
DET NORSKE VERITAS INDUSTRY B.V.,THE NETHERLANDS

CE

KCSJ-60V/KCSJ-72V

Computerized Single-Knit Electronic Jacquard Machine





KEUMYONG

www.keumyong.com

KEUM YONG'S KCSJ -60V

Model is the latest in electronic technically advanced computerized single knit electronic jacquard machine. The cylinder needle selection system is electronically controlled by specially designed WAC CERAMIC actuator equipped on the machine.



STANDARD SPECIFICATIONS

DIAMETER	GAUGE(N.P.I)	FEEDS		SPEED(R.P.M)
• 30″	18-28	72F	60F	18-22
32″	18-28	72F	64F	18-22
34″	18-28	84F	68F	16-20
36″	18-28	84F	72F	14-18

* WAC Ceramic 3positon(welt, tuck, knit) needle selection device
* Yarn feeding device : SFE Storage feeding device
* Size ring : Spreader System.
* Drive : A.C Motor with inverter.

STITCHES

* Single plain jersey with jacquard.
* Single knit jacquard in 2,3 and 4 colours with blister tubular jacquard.
* Controller :WAC controller
* Media : 3.5″ floppy disk
* Patterning device : The electronic needle selection(WAC Actuators)

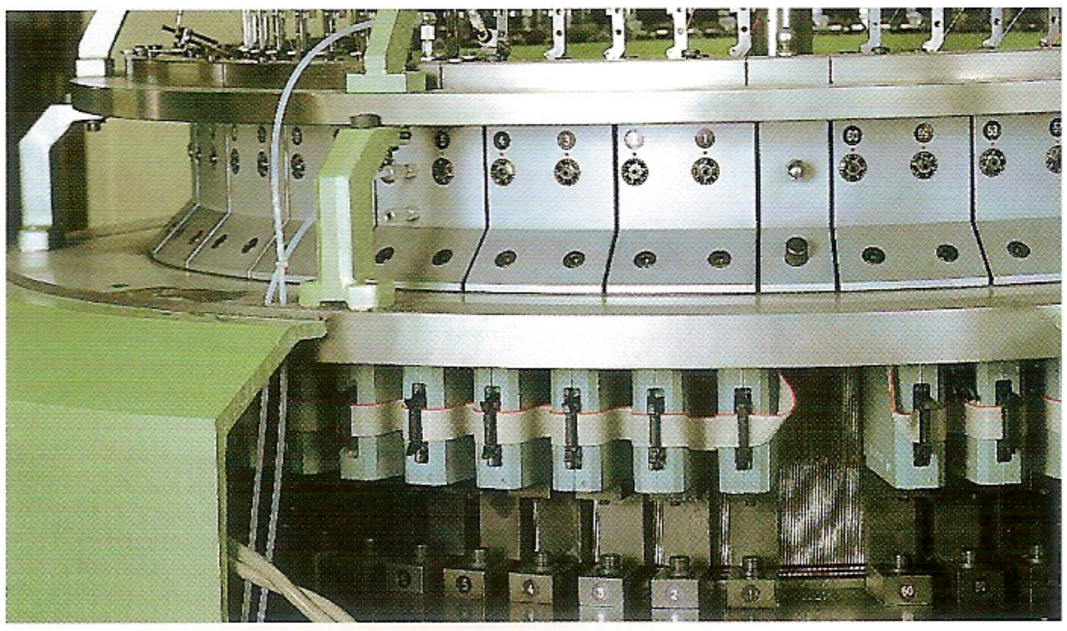

MODEL:**KCSJ -60V**

KEUMYONG

www.keumyong.com

KY-2009.8
Specifications are subject to change without notice.

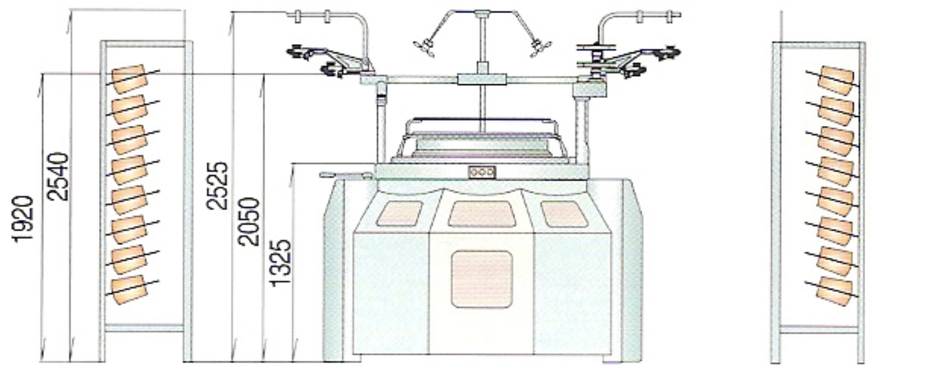

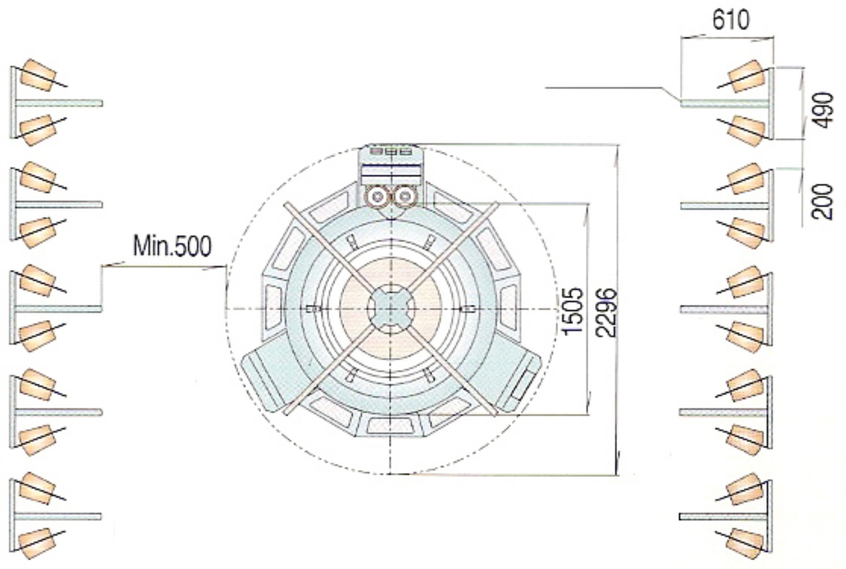

MODEL: **KCSJ-60V**



PACKING DIMENSIONS

KCSJ-60V, KCSJ-72V	30″ DIAMETER
Approx. Net weight	3.200Kg
Approx. Gross weight	3.500Kg
Case size(mm)	Length Width Height 2460×2270×2250

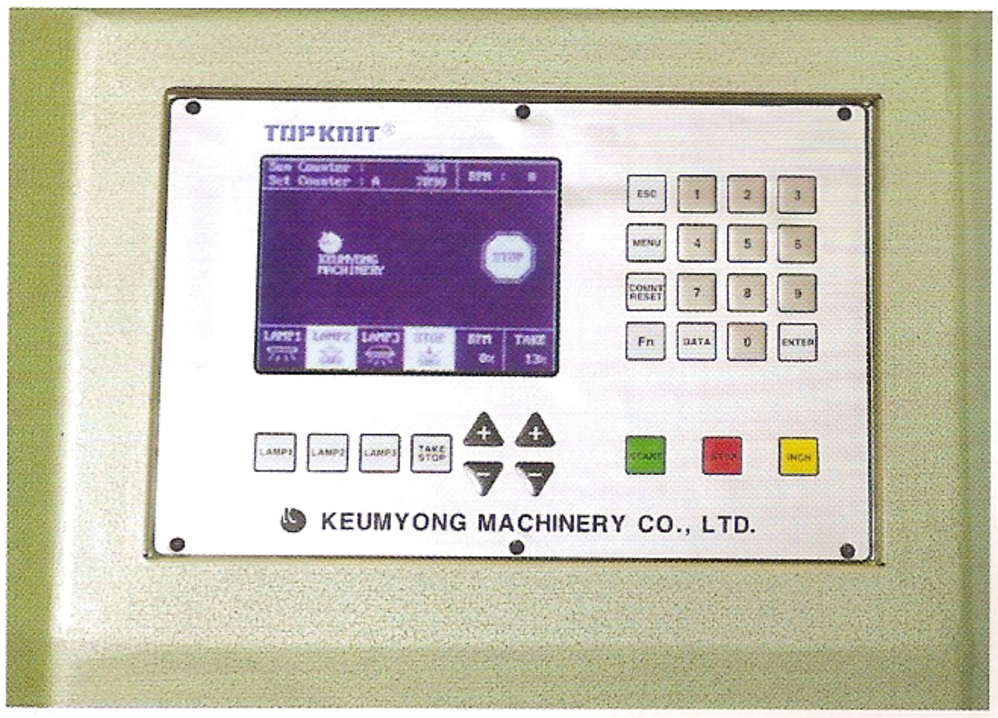

INTEGRATED CONTROLLER

KEUMYONG
www.keumyong.com