5630L Series

The Best Color Uniformity Emitter **LM80**



LUMENS 5630 Mid-Power LED is optimized performance in combination with the quality of light needed for distributed light source applications including linear lighting, under cabinet illumination and fluorescent retrofits. LUMENS 5630L LEDs provide ultimate low system cost with high efficiency delivering up to 200 lumen-per-watt at 6500K. 5630L offers full color CCT ranges from 2700K to 6500K.

Features

- Highest Efficacy up to 200 lm/w@6500K (80ra)
- Maximum Driver Current : 150mA
- High Color Rendering (>90ra) available
- Compliant with ANSI and 3-Step MacAdam Ellipse
- ANSI-compatible chromaticity bins
- Completed 6,000 hours of LM-80 testing

Applications

- Bulb
- Downlight
- Tube Light
- Panel Light
- Ceiling Light

LUMENS *Copyright © 2016 Lumens Co., Ltd. All right reserved*
12 Wongomae-Ro, Giheung-Gu, Yongin-Si, Gyeonggi-Do 446-901 Korea / www.lumensleds.com / sales01@lumens.co.kr

Electro-Optical Characteristics

80Ra
(T_a=25℃)

Model No	Watts [W]	Luminous Flux [lm]	Efficacy [lm/w]	CCT [K]	CRI [Ra]	Forward Voltage [V]	Forward Current [mA]	Max Forward Current [mA]
LM5630L2W827E00	0.2	30	161	2700	80+	2.86	65	150
LM5630L2W830E00	0.2	30	164	3000	80+	2.86	65	150
LM5630L2W840E00	0.2	31	166	4000	80+	2.86	65	150
LM5630L2W850E00	0.2	31	168	5000	80+	2.86	65	150
LM5630L2W857E00	0.2	32	170	5700	80+	2.86	65	150
LM5630L2W865E00	0.2	32	172	6500	80+	2.86	65	150
LM5630L3W827E00	0.2	32	172	2700	80+	2.86	65	150
LM5630L3W830E00	0.2	32	174	3000	80+	2.86	65	150
LM5630L3W840E00	0.2	33	176	4000	80+	2.86	65	150
LM5630L3W850E00	0.2	33	179	5000	80+	2.86	65	150
LM5630L3W857E00	0.2	34	181	5700	80+	2.86	65	150
LM5630L3W865E00	0.2	34	183	6500	80+	2.86	65	150
LM5630L4W827E00	0.2	34	183	2700	80+	2.86	65	150
LM5630L4W830E00	0.2	34	185	3000	80+	2.86	65	150
LM5630L4W840E00	0.2	35	187	4000	80+	2.86	65	150
LM5630L4W850E00	0.2	35	189	5000	80+	2.86	65	150
LM5630L4W857E00	0.2	36	192	5700	80+	2.86	65	150
LM5630L4W865E00	0.2	36	194	6500	80+	2.86	65	150

Note:
1. *Typical Luminous Flux value / Ta=25℃*
2. *Accuracy : CRI (±3), lm (±10%), , Dimension (±2mm)*
3. *Specifications can be changed without advance notice.*
4. *Installation shall follow cautions and guidance that Lumens provides.*

LUMENS *Copyright © 2016 Lumens Co., Ltd. All right reserved*
12 Wongomae-Ro, Giheung-Gu, Yongin-Si, Gyeonggi-Do 446-901 Korea / www.lumensleds.com / sales01@lumens.co.kr

Chromaticity Binning

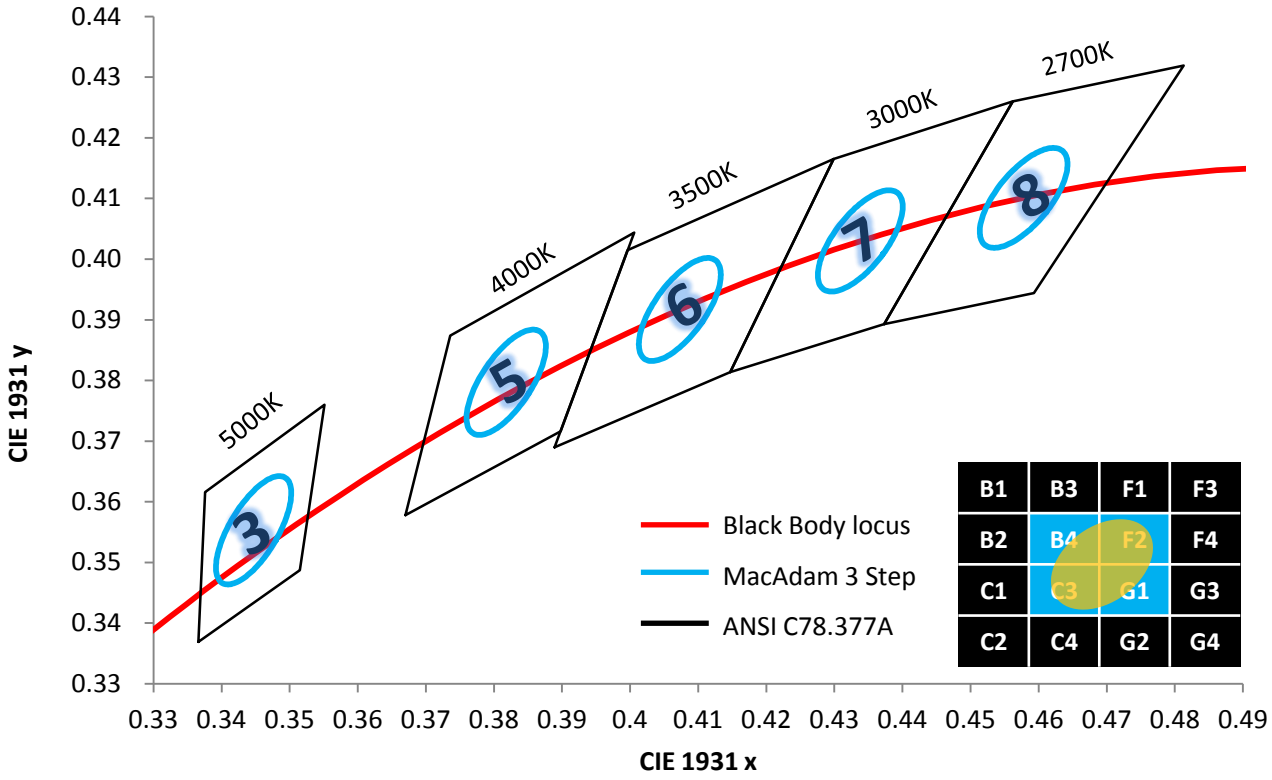

Copyright © 2016 Lumens Co., Ltd. All right reserved
12 Wongomae-Ro, Giheung-Gu, Yongin-Si, Gyeonggi-Do 446-901 Korea / www.lumensleds.com / sales01@lumens.co.kr

Mechanical Dimension

[Top View]

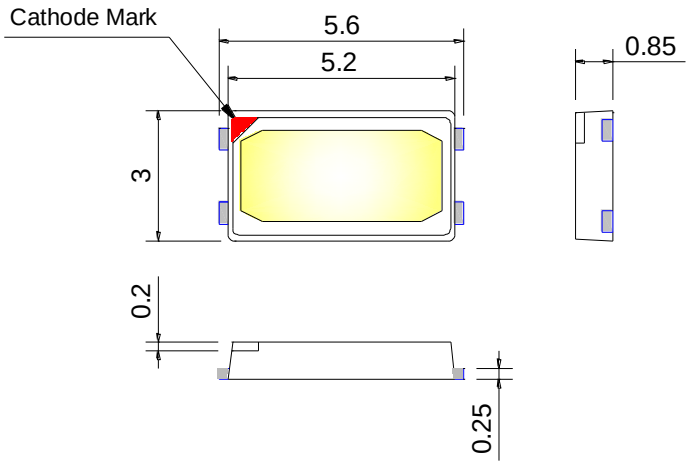

[Bottom View]

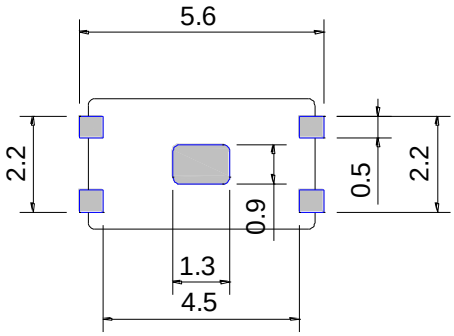

LUMENS
Copyright © 2016 Lumens Co., Ltd. All right reserved
12 Wongomae-Ro, Giheung-Gu, Yongin-Si, Gyeonggi-Do 446-901 Korea / www.lumensleds.com / sales01@lumens.co.kr