www.hkvalve.net



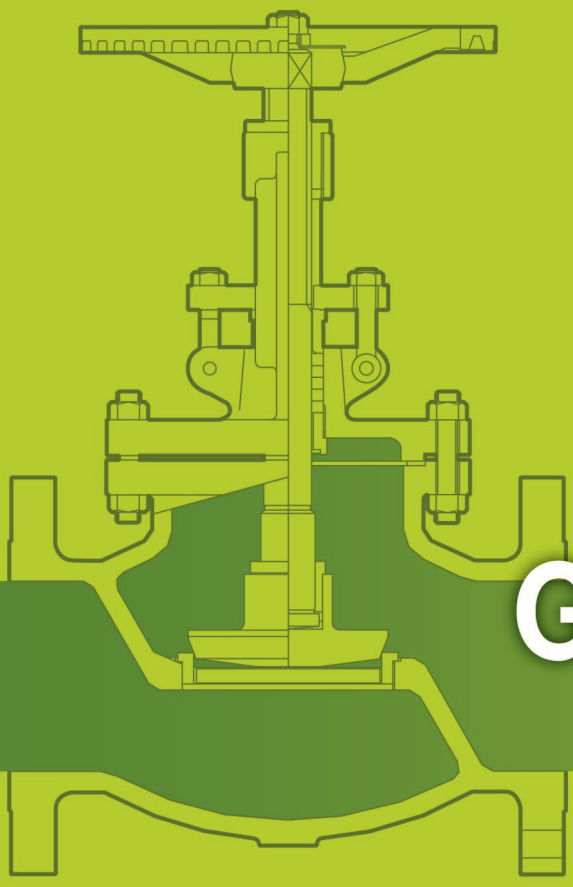

GLOBE VALVES

BOLTED BONNET

CAST STAINLESS STEEL
GLOBE VALVES BOLTED BONNET

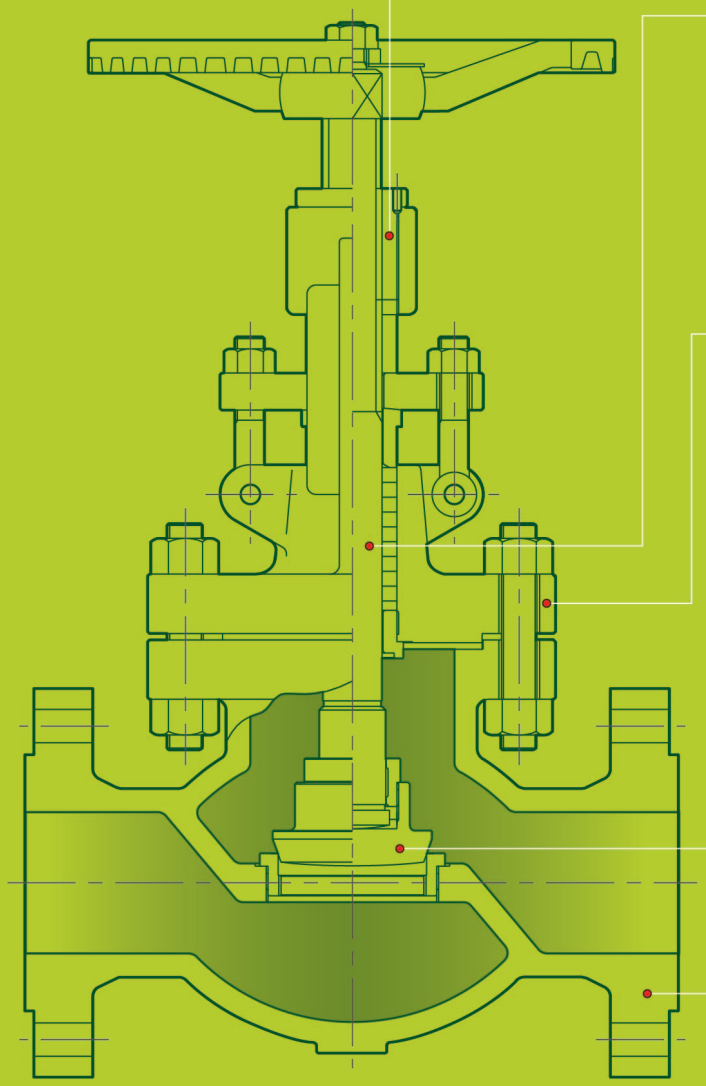

YOKE BUSH
The yoke sleeve is made from bronze, stainless steel of ductile iron having high resistance to wear and a high melting point. It is screwed into the bonnet and properly sized to withstand the stresses, which develop when opening and closing the valve.

STEM
The stem is part of the trim. A ground backseat is provided to ensure perfectly tight seal to the stuffing box when the valve is fully open. The stem is attached to the disc by means of a threaded ring, which allows the disc to rotate. The stem is ground to minimize friction and prevent damage to gland packing.

BONNET
The bonnet is in stainless steel. It is machined to accept the yoke sleeve and incorporates a stuffing box dimension in accordance with the BS standard.

DISC
The disc is part of the trim. It is normally supplied of the flat, tapered or plug type or, on request, of the parabolic regulating type, always free to rotate on the stem.
Special attention is given to the seat ring face, which is ground and lapped for a perfectly tight seal.

BODY
The body is in stainless steel. The basic dimension, i.e. wall thickness, face to face and flanges comply with the relevant API and ASNI standards. The Body-to-bonnet flange is circular and the sealing surface for connections to the bonnet are recessed in the 150lb and 300lb class or may be ring joint in the higher classes.
The body may be threaded for renewable seats. Bosses mat be provided for drain taps or by-pass piping.

CAST STAINLESS STEEL

NO	NAME OF PART	ASTM SPECIFICATION CORROSION SERVICE				REMARK
1	BODY	A351-CF8	A351-CF8M	A351-CF3	A351-CF3M	
2	BONNET	A351-CF8	A351-CF8M	A351-CF3	A351-CF3M	
3	DISC	A351-CF8	A351-CF8M	A351-CF3	A351-CF3M	NOTE 1
4	STEM	A276-304	A276-316	A276-304L	A276-316L	
5	YOKE BUSH	A439-D2	A439-D2	A439-D2	A439-D2	
6	PACKING GLAND	A276-304	A276-316	A276-304L	A276-316L	
7	GLAND FLANGE	A351-CF8 / A240-304	A351-CF8 / A240-304	A351-CF8 / A240-304	A351-CF8 / A240-304	
8	BONNET BOLT	A193-B8	A193-B8	A193-B8	A193-B8	
9	BONNET NUT	A194-8	A194-8	A194-8	A194-8	
10	GLAND BOLT	A193-B8	A193-B8	A193-B8	A193-B8	
11	GLAND NUT	A194-8	A194-8	A194-8	A194-8	
12	HINGE PIN	A276-304	A276-304	A276-304	A276-304	
13	HAND WHEEL	A395	A395	A395	A395	
14	HAND WHEEL NUT	A283-C	A283-C	A283-C	A283-C	
15	PACKING	COMMERCIAL	COMMERCIAL	COMMERCIAL	COMMERCIAL	NOTE 2
16	GASKET	COMMERCIAL	COMMERCIAL	COMMERCIAL	COMMERCIAL	NOTE 2
17	DISC GLAND	A276-304	A276-316	A276-304L	A276-316L	
45	WASHER	A283-C	A283-C	A283-C	A283-C	

Note 1. In case of 8" and larger : botton guide type
2. Packing & gasket material : customer's requirements, see page 63

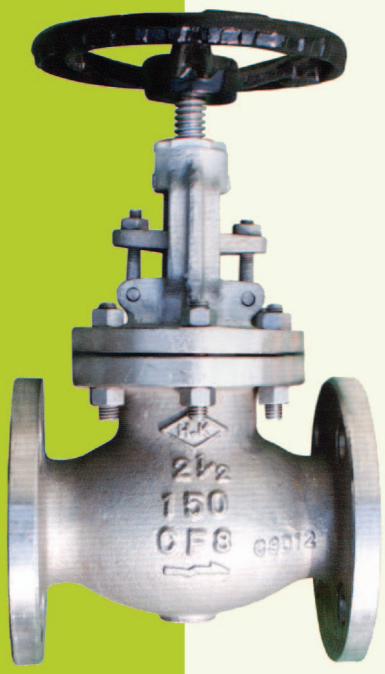

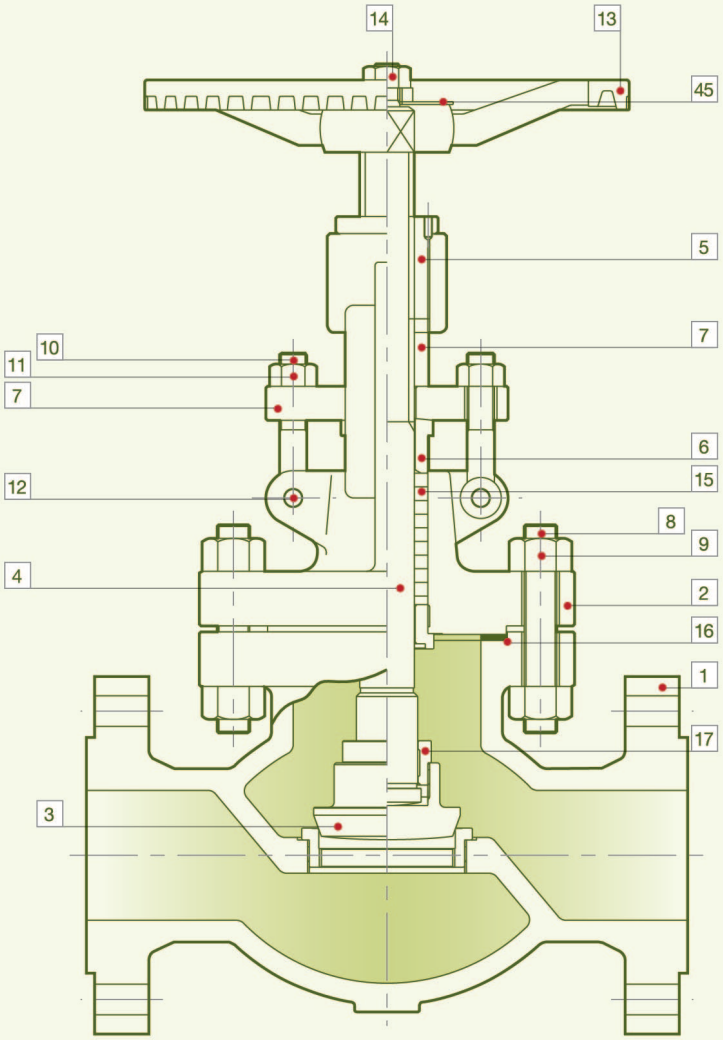

GLOBE VALVES
BOLTED BONNET
CAST STEEL

ASME CLASS 150LB

VALVE SIZE		2	2 1/2	3	4	5	6	8	10	12	14	16	18	20	24
	mm	50	65	80	100	125	150	200	250	300	350	400	450	500	600
L1 & L3	inch	8.0	8.5	9.5	11.5	14.0	16.0	19.5	24.5	27.5	31.0	36.0	38.5	38.5	51.0
	mm	203	216	241	292	356	406	495	622	699	787	914	978	978	1295
H	inch	10.8	11.4	12.5	13.8	15.6	17.3	22.0	26.4	29.1	54.7	62.6	71.7	80.7	90.6
	mm	275	290	320	350	400	440	560	670	740	1390	1590	1820	2050	2300
W	inch	7.7	7.7	8.5	9.4	11.0	11.8	14.0	15.7	17.7	22.0	22.0	24.0	27.6	27.6
	mm	195	195	215	240	280	300	355	400	450	560	560	610	700	700
L	inch	-	-	-	-	-	-	-	-	-	16.3	16.3	17.0	17.0	17.0
	mm	-	-	-	-	-	-	-	-	-	414	414	432	432	432
WEIGHT	LB	46.3	59	72.8	116.9	163.2	209.5	410.1	804.8	804.8	1364.9	1808.1	2154.3	2712.2	3472.9
	Kg	21	27	33	53	74	95	186	365	365	619	820	977	1230	1575

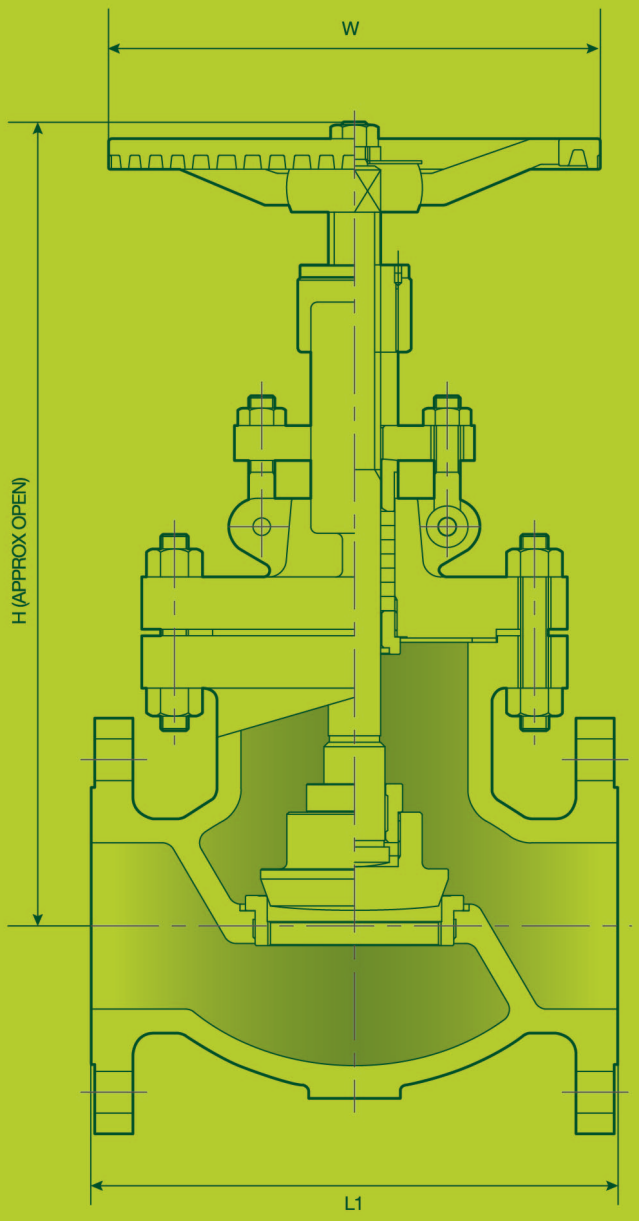

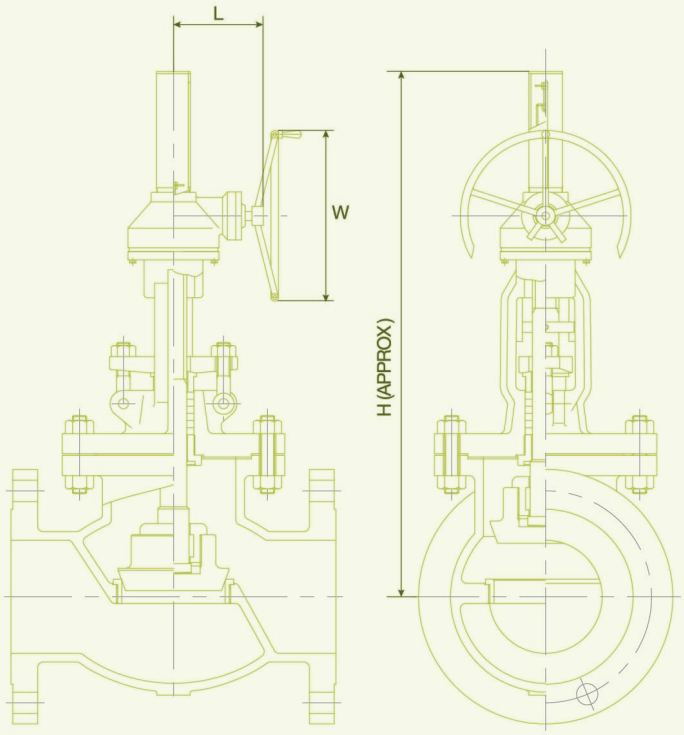

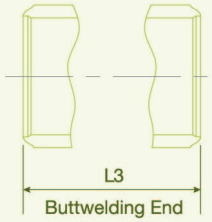

ASME CLASS 300LB

GOLBE VALVES
BOLTED BONNET
CAST STEEL

VALVE SIZE		2	2 1/2	3	4	5	6	8	10	12	14	16	18	20	24	32
		50	65	80	100	125	150	200	250	300	350	400	450	500	600	800
L1 & L3	inch	10.5	11.5	12.5	14.0	15.75	17.5	22.0	24.5	28.0	33.0	34	38.5	40	53	62.75
	mm	267	292	318	356	400	445	559	622	711	838	864	978	1016	1346	1594
L2	inch	11.12	12.12	13.12	14.62	16.38	18.12	22.62	25.12	28.62	33.6	34.6	39.12	40.75	53.88	63.4
	mm	283	308	333	371	416	460	575	638	727	854	879	994	1035	1369	1610
H	inch	14.4	15.7	16.1	18.9	26.6	27.6	29.5	31.5	37.6	54.7	62.6	71.7	80.7	90.6	122.0
	mm	365	400	410	480	676	700	750	800	955	1390	1590	1820	2050	2300	3100
W	inch	7.7	8.5	9.4	10.6	12.4	14.00	15.7	17.7	19.7	22.1	27.6	27.6	27.6	31.5	31.5
	mm	195	215	240	270	315	355	400	450	500	560	700	700	700	800	800
L	inch	-	-	-	-	-	-	-	-	-	16.3	18.4	18.14	18.4	20.7	20.7
	mm	-	-	-	-	-	-	-	-	-	414	468	468	468	526	526
WEIGHT	LB	61.7	86.0	99.2	189.6	253.6	330.8	621.8	809.2	1045.2	1907.3	2529.1	3014.2	3572.1	5159.7	7364.7
	Kg	28	39	45	86	115	150	282	367	474	865	1147	1367	1620	2340	3340

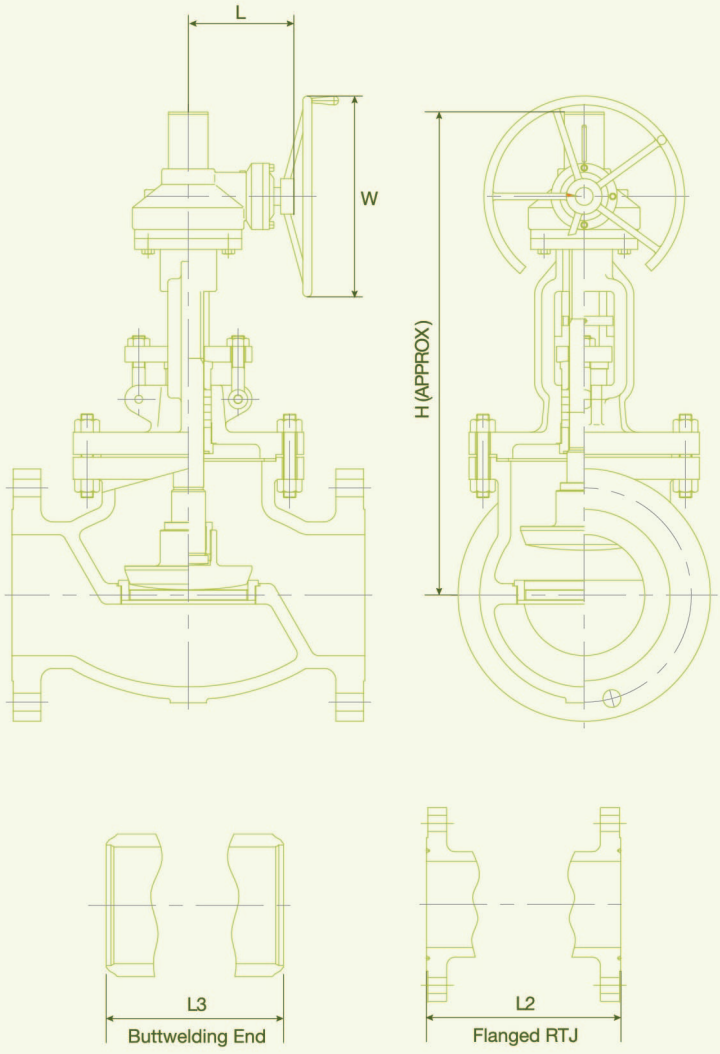

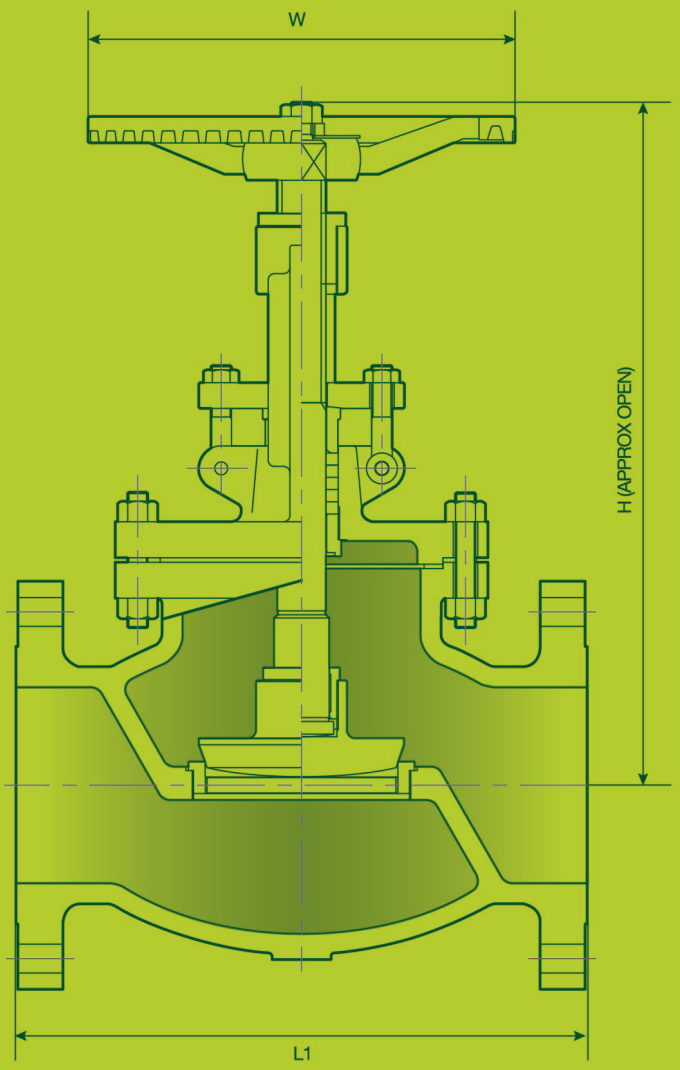

ASME CLASS 600LB

GLOBE VALVES
BOLTED BONNET
CAST STEEL

VALVE SIZE		2	2 1/2	3	4	5	6	8	10	12	14	16
		50	65	80	100	125	150	200	250	300	350	400
L1 & L3	inch	11.5	13.0	14.0	17.0	20.0	22.0	26.0	31.0	33.0	35.0	39.0
	mm	292	330	356	432	508	559	660	787	838	889	991
L2	inch	11.62	13.12	14.12	17.12	20.12	22.12	26.12	31.12	33.12	35.12	39.12
	mm	295	333	359	435	511	562	664	791	841	892	994
H	inch	16.0	19.8	19.9	22.4	31.8	37.8	51.8	59.5	96.9	70.9	76.0
	mm	407	502	505	568	807	959	1315	1511	1775	1800	1930
W	inch	7.7	8.5	10.6	11.8	14.0	15.7	28.0	31.5	35.4	35.4	35.4
	mm	195	215	270	300	355	400	710	800	900	900	*900
L	inch	-	-	-	-	-	-	18.4	20.7	26.4	26.4	26.4
	mm	-	-	-	-	-	-	468	526	670	670	670
WEIGHT	LB	114.5	141.1	187.4	330.8	511.3	714.4	1234.8	1741.9	2264.5	2932.7	3825.7
	Kg	52	65	85	150	250	324	560	790	1027	1330	1735

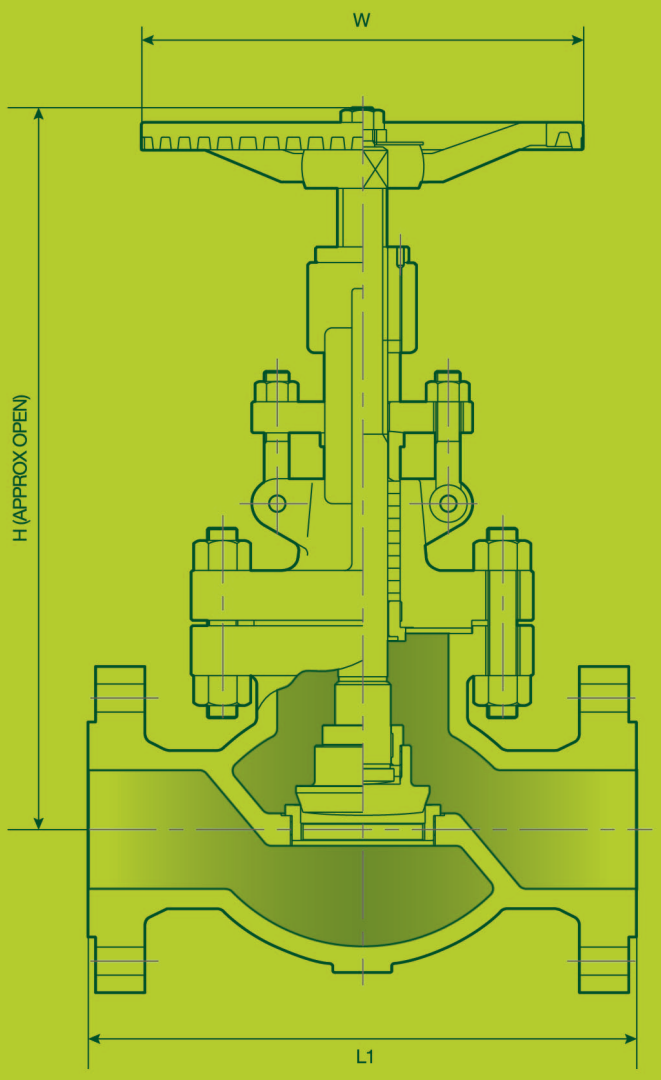

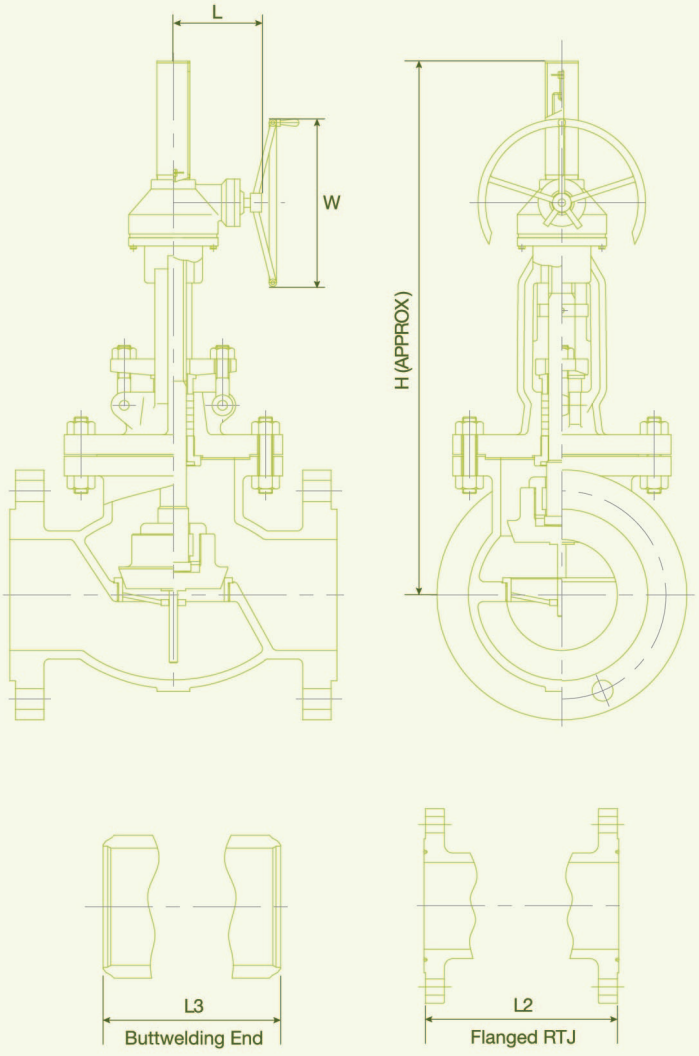

ASME CLASS 900LB

GLOBE VALVES
BOLTED BONNET
CAST STEEL

VALVE SIZE		2	2 1/2	3	4	5	6	8	10	12	14
		50	65	80	100	125	150	200	250	300	350
L1 & L3	inch	14.5	16.5	15.0	18.0	22.0	24.0	29.0	33.0	38.0	40.5
	mm	368	419	381	457	559	610	737	838	965	1029
L2	inch	14.62	16.62	15.12	18.12	22.13	24.12	29.12	33.12	38.12	40.88
	mm	371	422	384	460	562	613	740	841	968	1038
H	inch	27.4	27.4	30.5	33.7	53.1	58.6	65.69	63.0	67.1	87.0
	mm	695	695	775	855	1350	1488	1665	1600	1705	2210
W	inch	15.7	15.7	15.7	15.7	19.7	22.0	31.5	31.5	35.4	35.4
	mm	400	400	400	400	500	560	800	800	900	900
L	inch	-	-	-	-	-	16.3	20.7	20.7	26.4	26.4
	mm	-	-	-	-	-	414	526	526	670	670
WEIGHT	LB	176.4	271.2	154	441	815.9	1101.5	2756.3	4520.3	5843.3	8048.3
	Kg	80	123	161	200	370	500	1250	2050	2650	3650

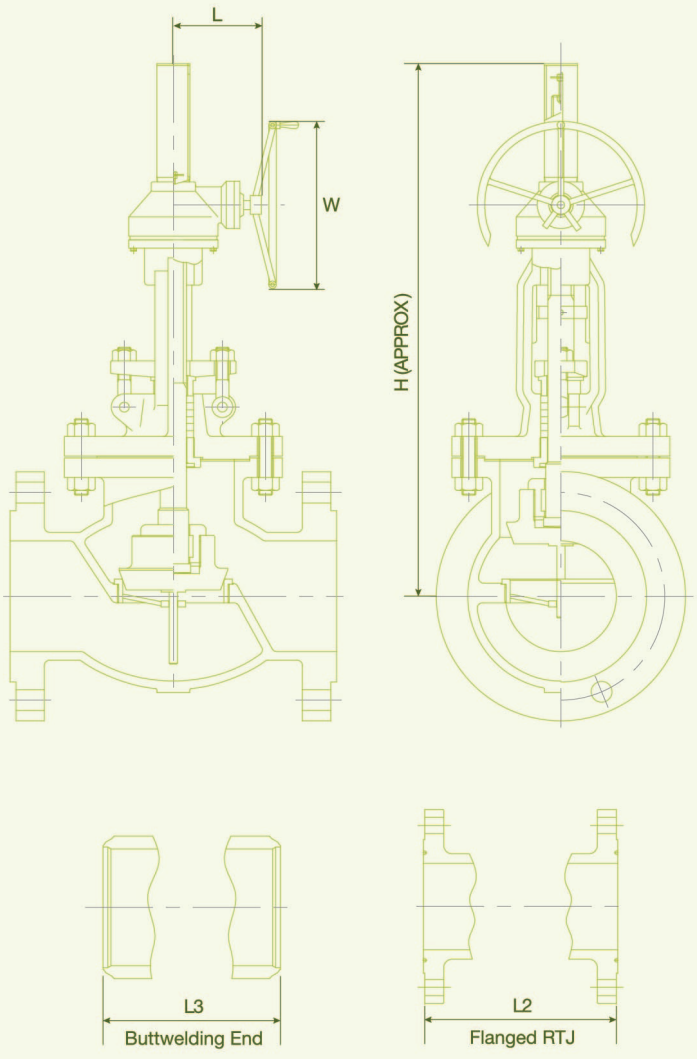

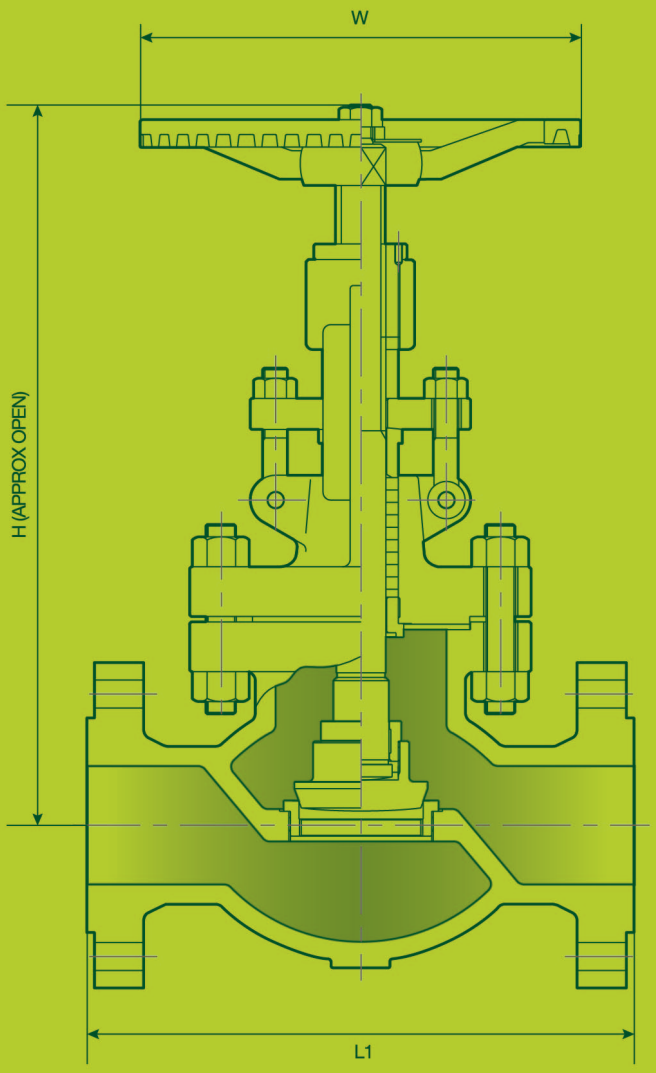

ASME CLASS 1500LB

GLOBE VALVES
BOLTED BONNET
CAST STEEL

VALVE SIZE		2	2 1/2	3	4	5	6	8	10	12	14
		50	65	80	100	125	150	200	250	300	350
L1 & L3	inch	14.5	16.5	18.5	21.5	26.5	27.75	32.75	39.0	44.5	49.5
	mm	368	419	470	546	673	705	832	991	1130	1257
L2	inch	14.92	16.62	18.62	21.62	26.61	28.0	33.13	39.38	45.12	50.25
	mm	371	422	473	549	676	711	842	1000	1146	1276
H	inch	27.4	27.4	31.5	40.0	57.1	64.8	77.2	91.0	105.1	126.0
	mm	695	695	799	1015	1450	1645	1960	2310	2670	3200
W	inch	15.7	15.7	19.7	19.7	24.8	28.0	28.0	30.0	30.0	30.0
	mm	400	400	500	500	630	710	710	760	760	760
L	inch	-	-	-	-	-	18.4	18.4	20.2	20.2	22.3
	mm	-	-	-	-	-	468	468	512	512	567
WEIGHT	LB	271.2	341.8	396.9	749.7	1124.6	1482	4630.5	7055.0	9702.0	11907.0
	Kg	123	155	180	340	510	627	2100	3200	4400	5400

