DEAD CENTER

FEATURES ;

- Accuracy guaranteed to 0.002mm TIR (0.0001").
- Through-hardened to HRc 60±2.
- Works on all CNC machines.
- Meets the rigid requirements of CNC turning and Grinding machine.
- Excellent for Built-in tail stock.

Available

Carbide Tipped Points

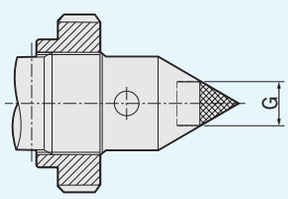



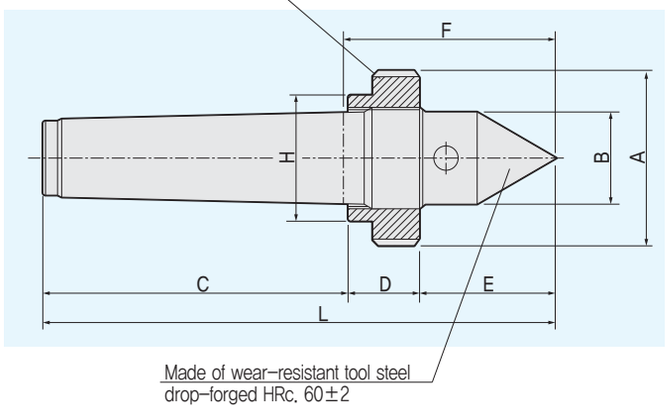

Dimension

13	1	0	0	MT

Unit : mm, kg

MODEL	MT	A	B	C	D	E	F	H	G	L
131003	3	50	24	82	16	42	59	40	10	140
131004	4	60	32	104	24	47	72.5	43	14	175
131005	5	80	45	131	30	60	93	58	18	221
131006	6	100	60	187	30	72	107	78	30	289