USER'S MANUAL

IR V/F Indoor Dome Camera

CAUTION

RISK OF ELECTRIC SHOCK
DO NOT OPEN

CAUTION : TO REDUCE THE RISK OF ELECTRIC SHOCK,
DO NOT REMOVE COVER
NOT USER SERVICEABLE PARTS INSIDE
REFER SERVICING TO QUALIFIED SERVICE PERSONNEL

Dimensions

Part name & Dimension

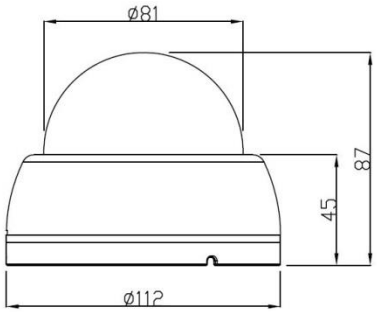

Accessories



Screw



Opener

Installation

Step.1

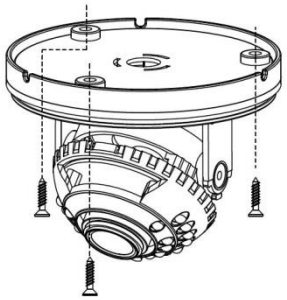

Step.2

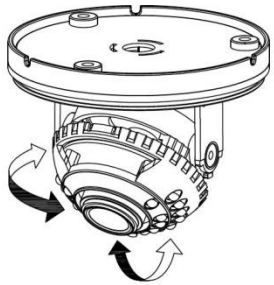

Step.3

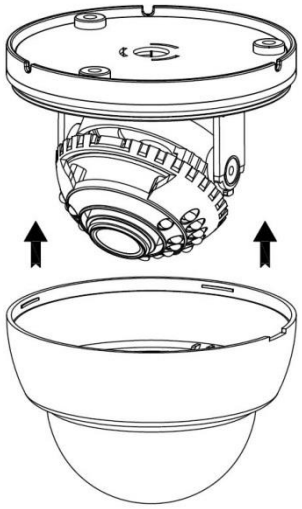

Cable

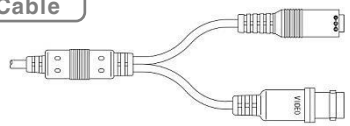

CAUTION! Please use regulated power supply DC12V 300mA
Reverse Polarity Protection

Features

1/3" 520K Sony Super HAD II Color CCD
700 TV Line of resolution
D-WDR for clear vivid pictures where strong back-lighting occurs
Advanced DNR (Digital Noise Reduction)
2.8~12mm DC auto iris lens
24 pcs of IR LEDs
IR Smart for better night vision performance
3 axis gimbal bracket
Built-in OSD (option)
DC 12V

Specifications

TV System		NTSC	PAL
Image pick-up Device		1/3" 520K Sony Super HAD II Color CCD	
Number of Pixels	H	976	976
	V	494	582
Scanning Frequency	H	15.734KHz	15.625KHz
	V	59.94Hz	50Hz
Horizontal Resolution	Color	700 TV Lines	
Scanning System		2:1 Interlace	
S/N Ratio		More than 52dB	
Min. Sensitivity		0.1 Lux at F : 1.2 0.001 Lux at IR on	
IR LED		24 pcs of IR LEDs	
Gamma Correction		0.45 Approx.	
Gain Control		Automatic	
Video Output		Composite Video 1.0Vp-p/75Ω	
Lens		2.8-12mm DC auto iris lens	
Power Source		DC 12V 300mA	
Power Consumption		Max 3.0 Watt	
Operating Temp.		-10℃ ~ +50℃	
Dimensions (mm)		94mm(D) x 80mm(L)	
Weight/g		230g	

■ **Option : OSD**

845313SUM000-R01

All specification and pictures are subject to change without notice to improve quality.