BLDC MOTOR □60(GEAR HEAD)

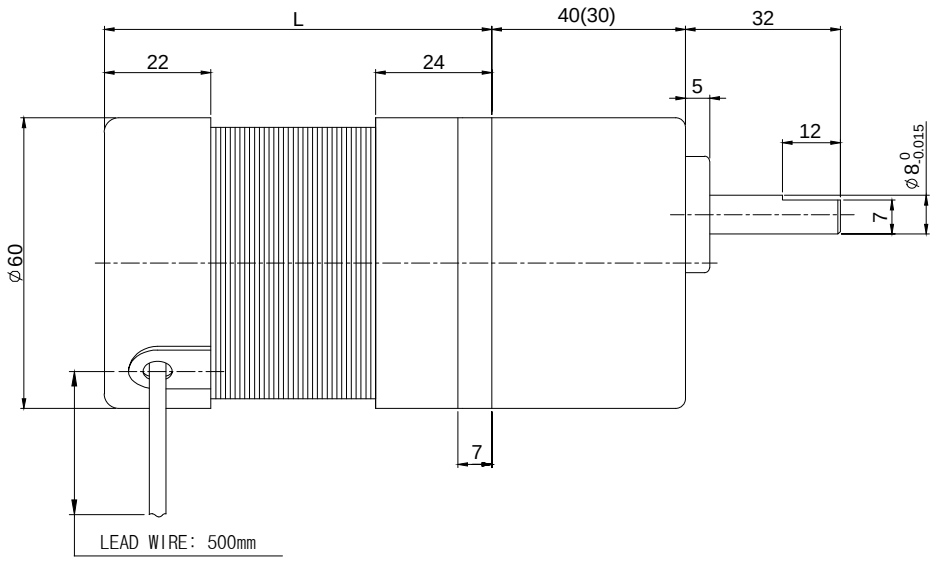

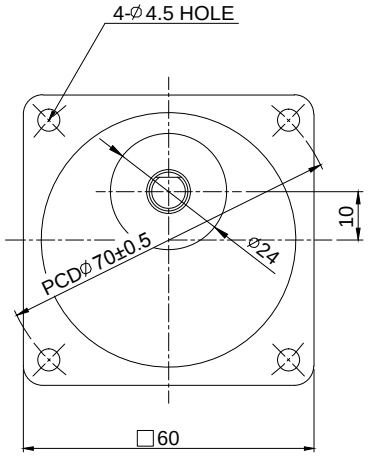

CONNECTOR

DC 12, 24V

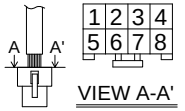

VIEW A-A'

CONNECTOR(5557-08)

PIN NO.	Cable Color	Lead Wire	Remark
1	ORANGE	AWG 24	Vcc
2	RED	AWG 20	U
3	YELLOW	AWG 20	V
4	BLUE	AWG 20	W
5	BLACK	AWG 24	GND
6	WHITE	AWG 24	Hu
7	GREEN	AWG 24	Hv
8	BROWN	AWG 24	Hw

AC 220V

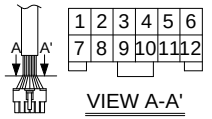

VIEW A-A'

CONNECTOR(5557-12)

PIN NO	Cable Color	Lead Wire	Remark
1	BLUE	AWG 20	W
2			
3			
4	BROWN	AWG 24	Hw
5	GREEN	AWG 24	Hv
6	WHITE	AWG 24	Hu
7	YELLOW	AWG 20	V
8	RED	AWG 20	U
9	SHIELD		
10			
11	ORANGE	AWG 24	Vcc
12	BLACK	AWG 24	GND

GEAR HEAD SIZE

GEAR RATIO	SIZE
3 / 1 ~ 18 / 1	30
20 / 1 ~ 200 / 1	40

L	MODEL
60	N012010 / N024020 / N220040
70	N012015 / N024040 / N220060
80	N012020 / N024050 / N220080

* ENCODER / BRAKE 장착 가능(별도협의후 구매)

Applicable Driver	
Voltage	Driver
DC 24V	SBDM-05A
AC 220V	SBDSMI-03A
	SBDSMA-03A
	SBDSMS-03A