Substation Power Transformers
Pad Mounted Transformers

ANSI, IEEE and NEMA

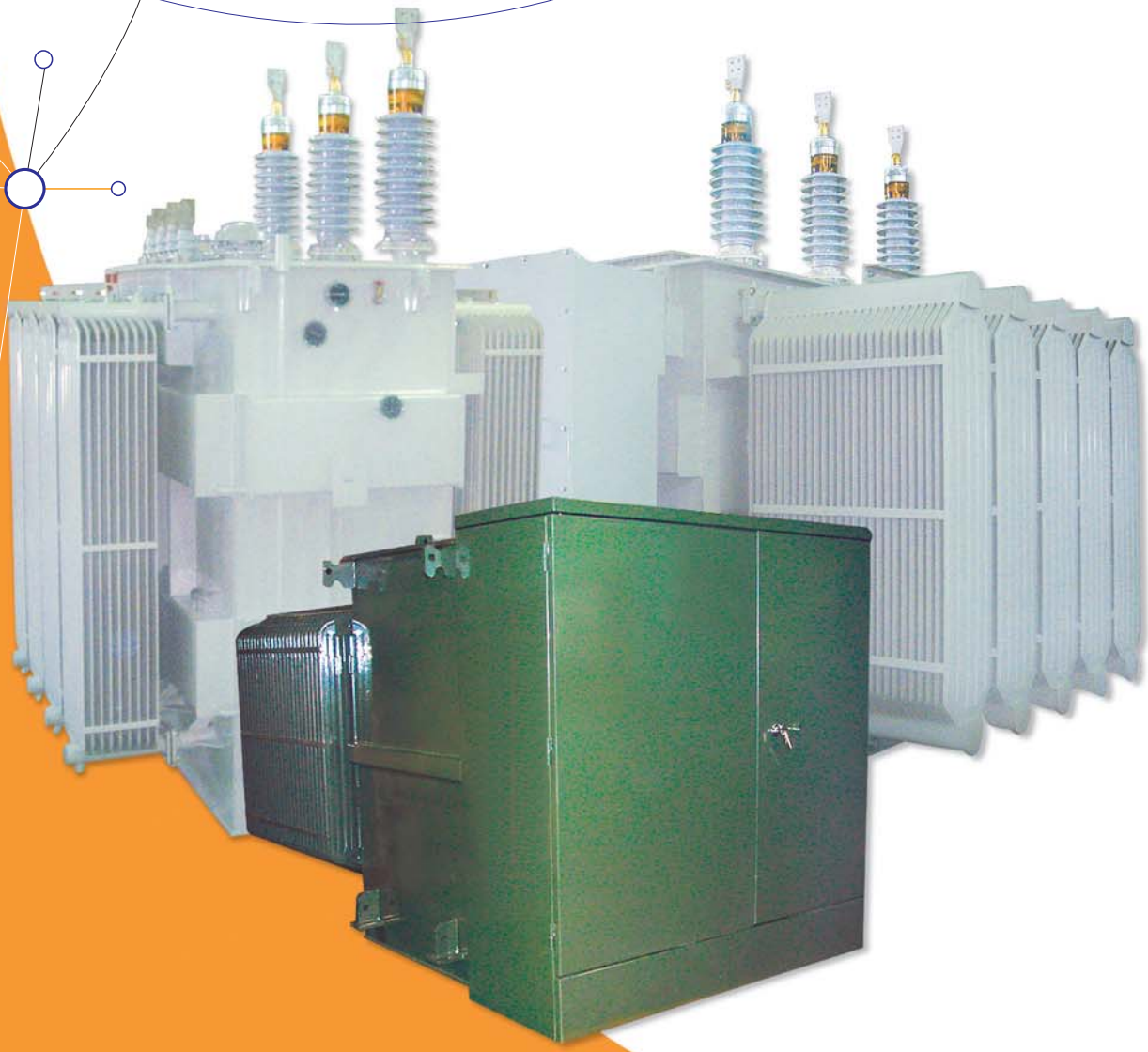

HAN CHANG TRANSFORMER

Substation Power Transformers







General explanation

We are able to achieve compact design with 3D Modeling and high efficiency Substation Power Transformers with Hib grade silicon steel and special type design that is to be easy transpotation and installation.

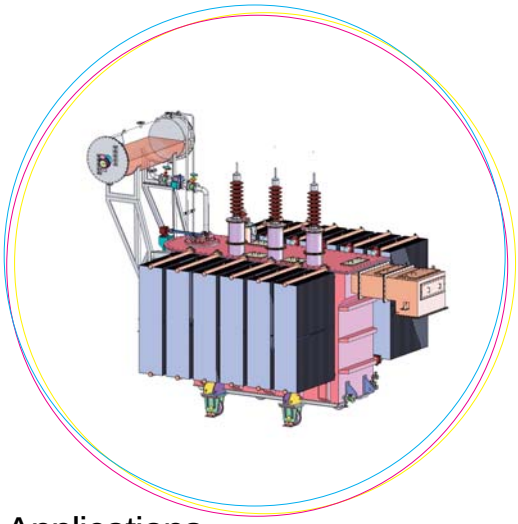

Product Scope

Max. Voltage and MVA : Upto 138 kV and 50 MVA
Tap changer type : Off load and Load tap changers
Available Fluids : Mineral Oil, Silicon Oil and FR3(Vegetable Oil)
Standard : ANSI, IEEE, NEMA and IEC

Applications

High efficiency design - TP1
Special Ambient Design
Low Sound Level Design
50 Hz and 60 Hz Design
K-Factor Rating
Network type Transformers











General explanation

HANCHANG's three-phase pad-mounted transformer is designed to protect environmental hazards.

All transformers are developed and produced especially to satisfy exacting customer's exact specification.

The latest applicable standards (ANSI, NEMA, IEEE) have been applied to all of Hanchang's transformers.

Three-phase pad-mounted transformers are available in live-front or dead-front designs.

Both radial and loop feed configurations are built based on ANSI standards.

The dead-front bushing configurations are in accordance with ANSI C57.12.26, live-front per ANSI C57.12.22.



This establish to underground supply of electric power system burying processing distribution line in land as suitable transformer at beauty of city environment.

The quality of corrugated style radiator is superior to panel style radiator which is mainly used in existing.

HANCHANG manufacture to have excellent cooling effect by corrugate cooling way and external appearance is beautiful.

HANCHANG's proven design offers excellent mechanical strength that has been proven through years of service and special testing.

We are constantly trying our best to introduce innovative product to the transformer industry, bringing you the high quality transformer with competitive cost.

Pad mounted Transformers







Standard characteristics

- 65°C average winding rise
- Unique step-stacked core and rectangular wound core
- 60 Hz standard, optional 50 Hz
- Mineral oil, optional FR3
- Operating voltages for 300 kVA through 1500 kVA rating:

  High Voltages (HV) :
  - 4160Grd Y/2400 V through 34500 Grd Y/19920 V
  - 2400 through 34500 V Delta
  - Various dual high voltages

  High Voltage taps :
  - All voltages are available with 5 or 7 step taps
  - Dual voltage taps provided only on the higher voltage

  Low Voltages (LV) :
  - 208Y/120 V, 480Y/277 V, 480 V △, 240 V △, and 240 V △, with 120 V mid-tap in one phase
  - 4160Y/2400 V, 4160 V △, 2400 V △,

  Primary insulation classes : 35 kV, 200 kV BIL and below

- Operating voltages for 2000 kVA through 7500 kVA rating:

  High Voltages (HV) :
  - 12470Grd Y/7200 V through 34500 Grd Y/19920 V
  - 4160 V through 34500 V Delta
  - Various dual high voltages

  Voltage taps :
  - All voltages are available with 5 or 7 step taps
  - Dual voltage taps provided only on the higher voltage

  Low Voltages (LV) :
  - 480Y/277 V, 480 V △, 240 V △
  - 4160Y/2400 V, 4160 V △, 2400 V △

- Impedance guidelines :

  300 kVA - 500 kVA : 2.8 - 5.0% nominal
  750 kVA - 2500 kVA : 5.75% nominal
  3000 kVA - 7500 kVA : consult Hanchang Transformers.

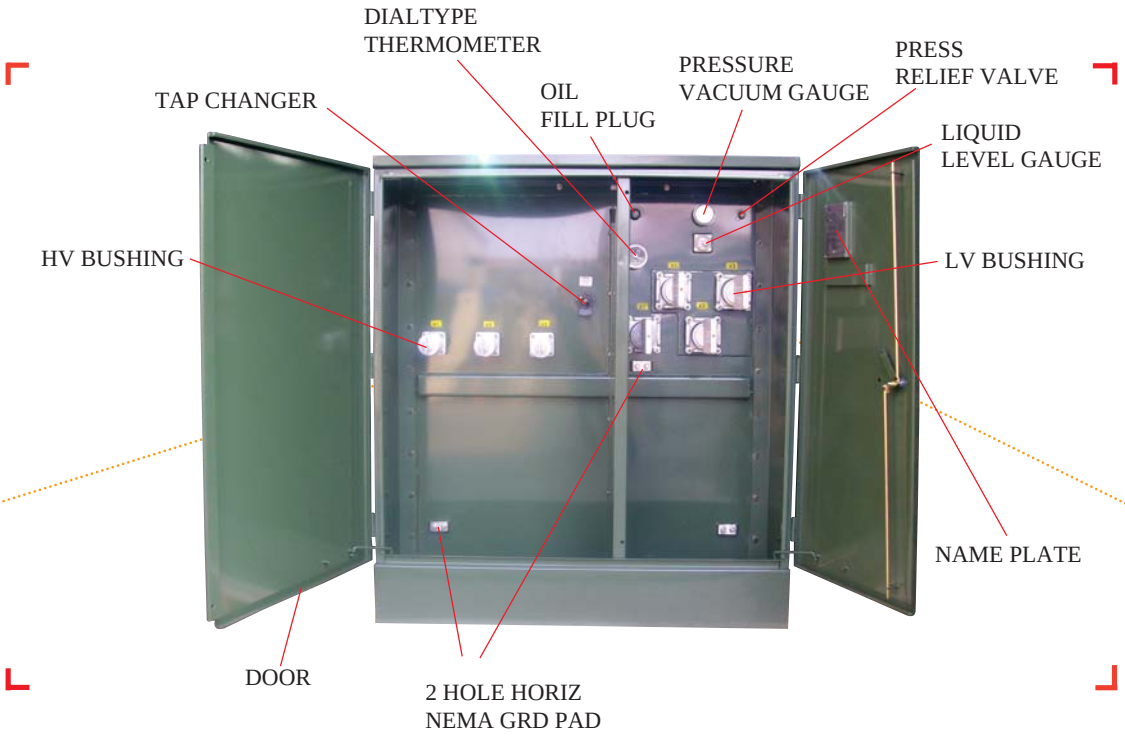

Standard features

- Tank : Mild steel, optional stainless steel
- Bolted-on cabinet with removable sill having the following depths :
  - 19 ”deep for 300 kVA through 750 kVA
  - 22 ”deep for 1000 kVA through 1500 kVA
  - 24 ”deep for 2000 kVA through 3750 kVA
  - 30 ”deep for 5000 kVA through 7500 kVA
- HV and LV compartment doors-hinged and lift-off type with 120° holding bars
- Stainless steel door hinges
- Steel HV/LV compartment barrier
- Padlocking facility with one penta-head bolt on the LV compartment door and two penta-head bolts on the HV compartment door-including 3 point latching mechanism
- HV connection:
  - Live front-external clamped and removable HV bushings with eyebolt, clamp type connector
- LV connection:
  - Externally clamped polymer & porcelain LV bushing with 4-12 Hole spades
- Nameplate per ANSI requirement
- Self-actuating pressure relief valve
- Oil fill plug
- 1”drain valve with sampler for 750 kVA and above
- Removable LV neutral ground strap; as required
- Xo/Ho for Y-Y connected transformers
- Cooling panels
- Durable, corrosion-resistance powder coat paint finished Munsell Green 7GY3.29/1.5 or ANSI # 70 Gray 5.0BG7.0/0.4
- NEMA tank ground pads
- Four (4) lifting lugs
- Jacking bosses
- Provision for liquid level gauge
- Provision for liquid temperature gauge
- Provision for pressure vacuum gauge
- Provision for press relief valve

LIQUID - FILLED THREE - PHASE PAD - MOUNTED TRANSFORMER
DEAD & LIVE FRONT - RADIAL FEED

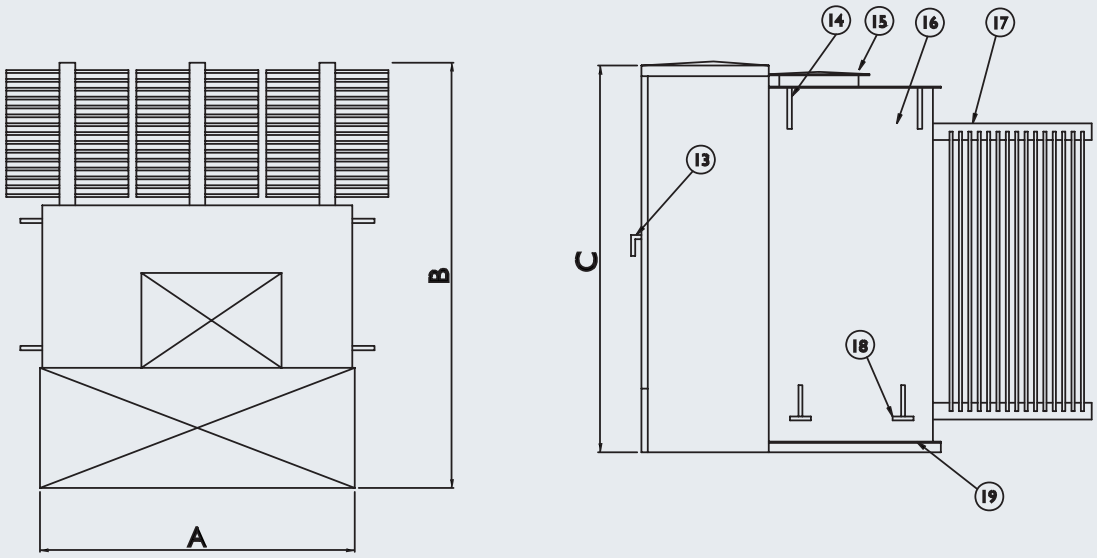

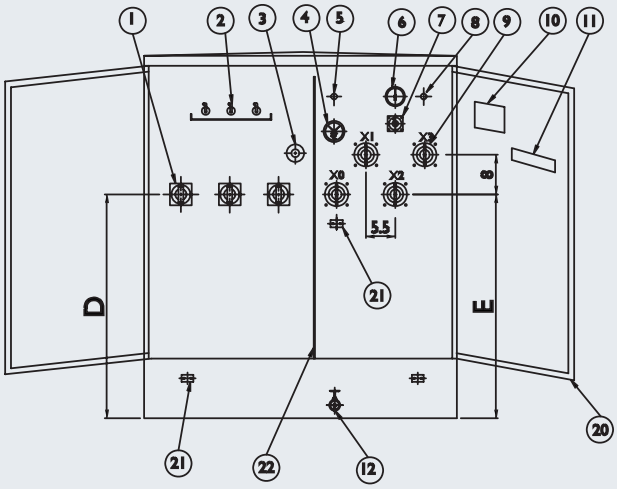

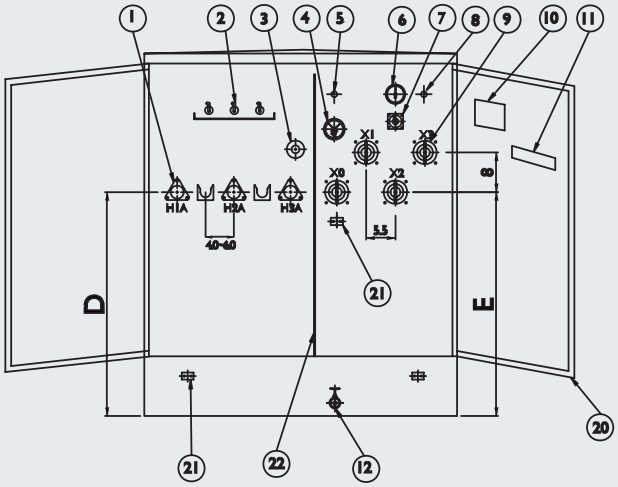

DEAD FRONT
RADIAL FEED

LIVE FRONT
RADIAL FEED

NO.	NAME	NO.	NAME
1	HV BUSHING	12	1 IN DRAIN VALVE WITH SAMPLER
2	BAY-O-NET FUSE	13	PAD LOCKABLE DOOR HANDLE
3	TAP CHANGER	14	LIFTING LUGS
4	DIAL TYPE THERMOMETER	15	HAND HOLE & SECURITY COVER
5	1 IN FILL PLUG	16	TANK
6	PRESSURE VACUUM GAUGE	17	COOLING RADIATORS
7	LIQUID LEVEL GAUGE	18	JACKING PAD
8	PRESSURE RELIEF VALVE	19	JACKING PROVISIONS
9	LV BUSHING	20	DOOR
10	NAME PLATE	21	2 HOLE HORIZ NEMA GRD PAD
11	SERIAL NO	22	METAL LV-HV BARRIER

H.V	12470V, 13200V, 13800V, 24940V
L.V	480Y/277V, 208Y/120V

RATING kVA	A	B	C	D	E	OIL VOLUME Gallons	TOTAL WEIGHT Lbs.
500	54	55	62	37	37	180	4600
750	57	62	65	40	40	230	5850
1000	57	75	69	43	43	280	6800
1500	60	84	70	44	44	360	9400
2000	63	86	71	46	46	400	11100
2500	64	90	74	47	47	460	13000
3000	70	108	80	49	49	480	14100
3750	73	127	81	51	51	520	15700

UNIT : INCH

LIQUID - FILLED THREE - PHASE PAD - MOUNTED TRANSFORMER
DEAD FRONT - LOOP FEED

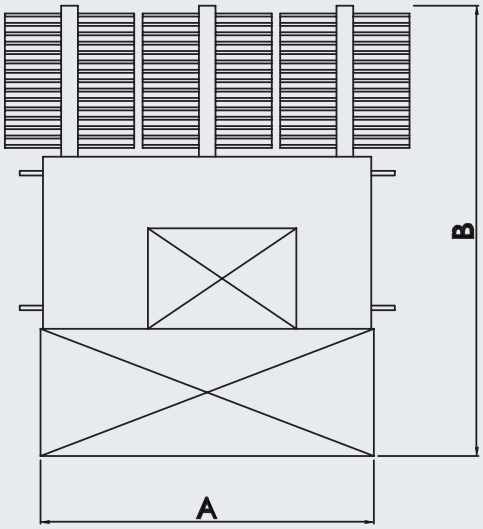

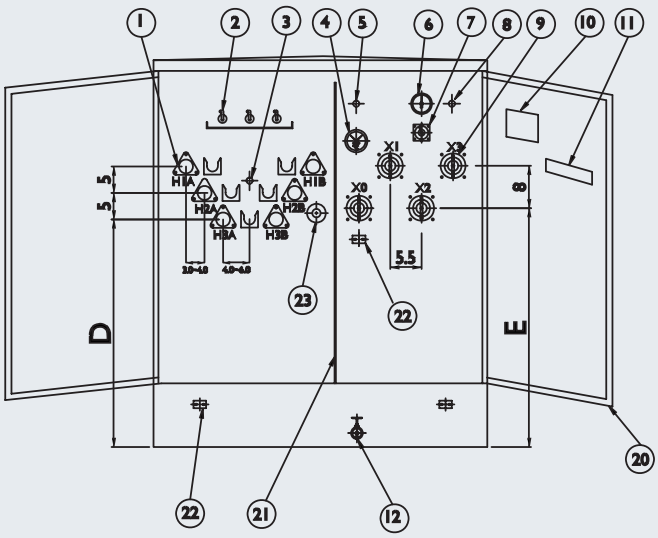

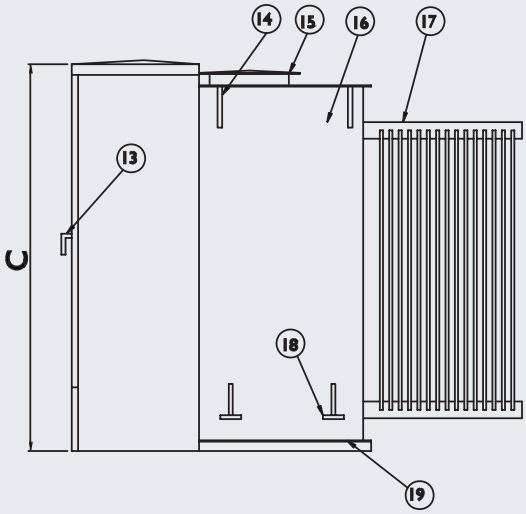

NO.	NAME	NO.	NAME
1	HV BUSHING WELLS ONLY	13	PAD LOCKABLE DOOR HANDLE
2	BAY-O-NET FUSE	14	LIFTING LUGS
3	4-POSITION T-BLADE S/W	15	HAND HOLE & SECURITY COVER
4	DIAL TYPE THERMOMETER	16	TANK
5	1 IN FILL PLUG	17	COOLING RADIATORS
6	PRESSURE VACUUM GAUGE	18	JACKING PAD
7	LIQUID LEVEL GAUGE	19	JACKING PROVISIONS
8	PRESSURE RELIEF VALVE	20	DOOR
9	LV BUSHING	21	METAL LV-HV BARRIER
10	NAME PLATE	22	2 HOLE HORIZ NEMA GRD PAD
11	SERIAL NO	23	TAP CHANGER
12	1 IN DRAIN VALVE WITH SAMPLER		

H.V	12470V, 13200V, 13800V, 24940V
L.V	480Y/277V, 208Y/120V

RATING kVA	A	B	C	D	E	OIL VOLUME Gallons	TOTAL WEIGHT Lbs.
500	56	55	64	36	37	210	4900
750	59	62	67	39	40	250	6000
1000	60	75	71	42	43	310	7010
1500	62	84	72	43	44	390	9850
2000	64	86	73	45	46	430	11200
2500	66	90	76	46	47	490	13200
3000	72	108	82	48	49	510	14400
3750	75	127	83	50	51	550	16000

UNIT : INCH



HAN CHANG TRANS CO., LTD.

Head Office / Factory : 1593-3, Songjung-dong, Gangseo-gu, Busan, Korea.
Domestic Tel. 82-51-831-3470
Overseas Tel. 82-51-831-3474
Overseas Fax. 82-51-831-3477

http://www.hctr.co.kr
E-mail : export@hctr.co.kr