Loudspeaker Specification Sheet

Model Number : BH16K004L

Revision : Rev 00.
Date : 05.JUN.17

Features:

- Driver Type : Tweeter
- Size : 13mm (0.5inch)
- Magnet : Neodymium
- Frame : Plastic
- Diaphragm : Silk



Specifications:

- Rated Power Handling : 5W (RMS)
- Characteristic Sensitivity : 85dB ± 2dB (1W/1m)
- Nominal Impedance : 6Ω
- Free Air Resonance Frequency, fs : 2.5kHz ± 20%
- Frequency Range : fs ~ 20kHz ± 20%
- Voice Coil Inner Diameter : Ø13.5 (mm)
- Net Weight : 23.5g (0.8oz)

Dimensions & Mounting Information:

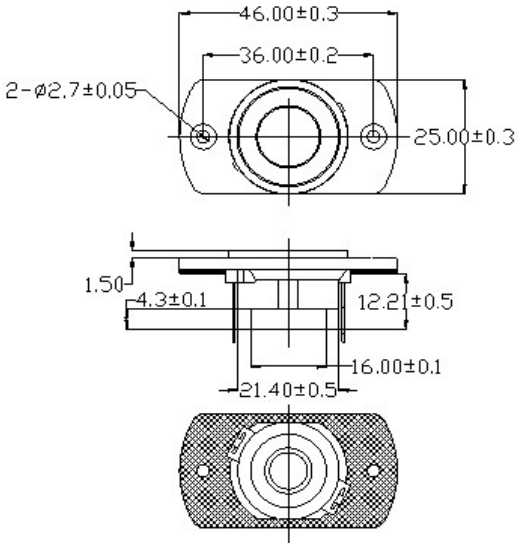

Frequency & Impedance Response:

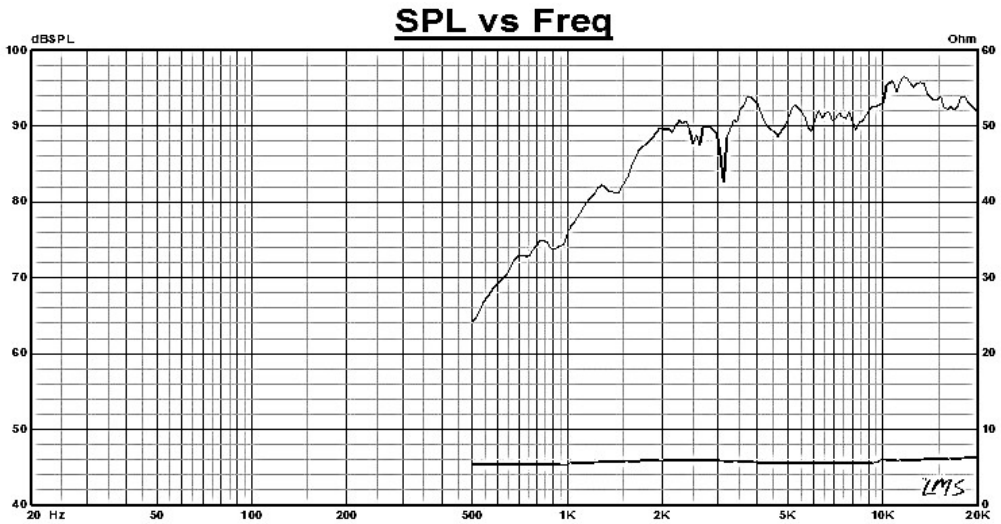

http://www.bhacoustic.com
105, Sinwon-ro, Yeongtong-gu, Suwon-si, Gyeonggi-do, Republic of Korea 16678
Tel : +82(31)-206-5477 Fax : +82-(21)-206-5473