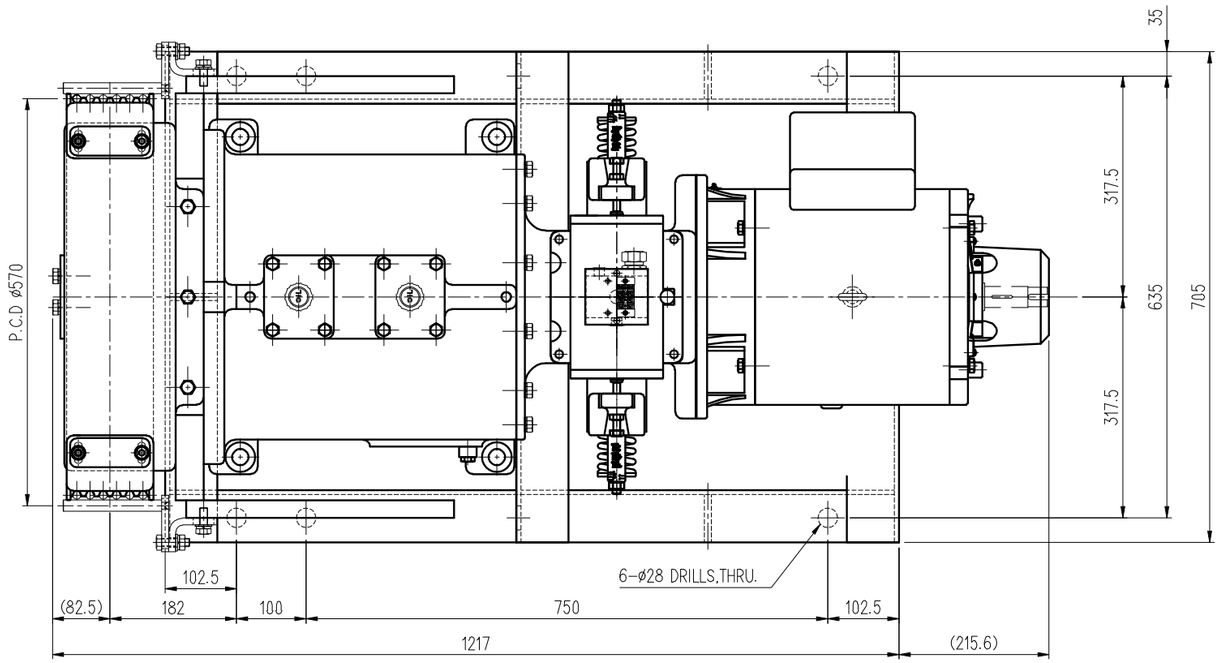

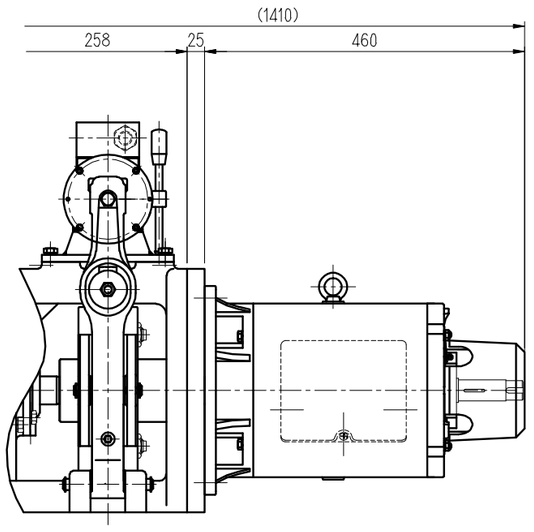

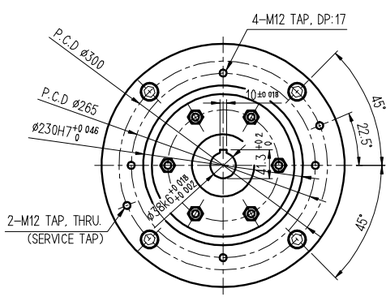

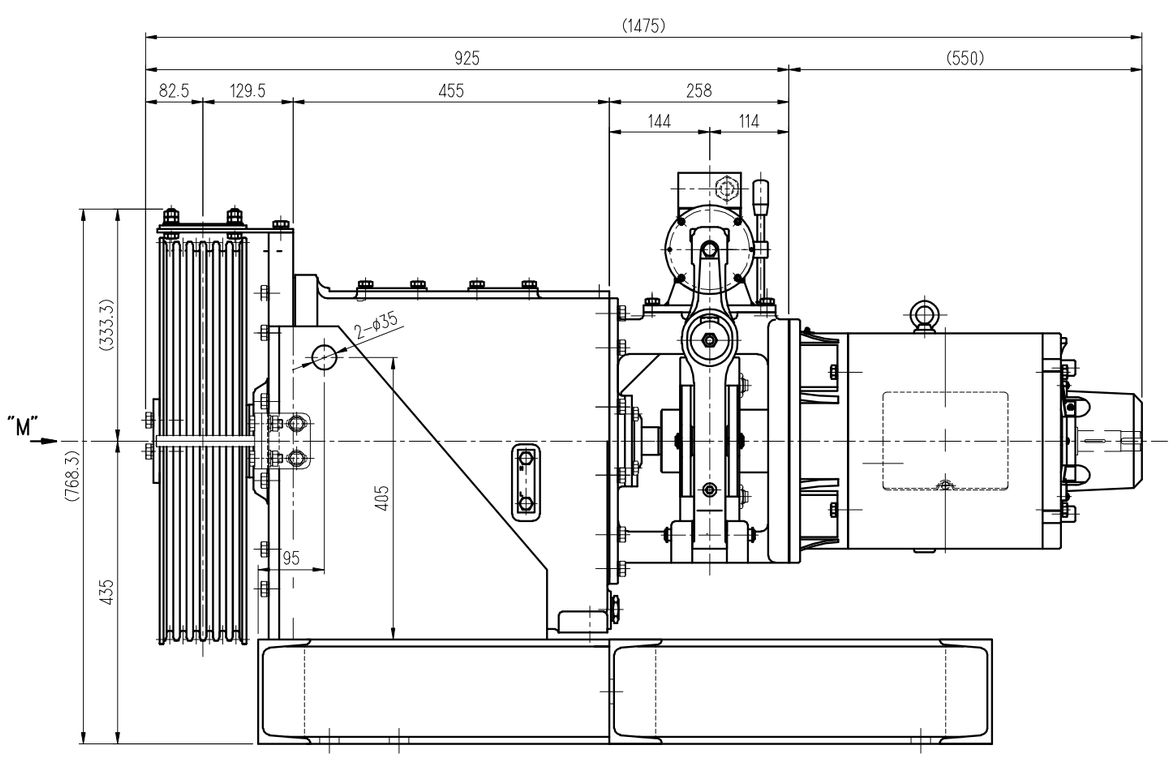

No.1 7.5kW Motor

No.2 11kW Motor

