

TP-32BA

Photo Resist Pump

Conroller All-in one type series

Excellent Dispense Volume Reliability

- DC Servo motor pump for constant dispenses
- Automatic Bubble removal System
- Automatic Degasing Function
- Recirculation and Purge stage for Bubbles Removal
- Recirculated PR returns to the Buffer Tank
- Automatically Eliminating the Pressure in the Filter
- Step dispenses
- Outer Type Bellows

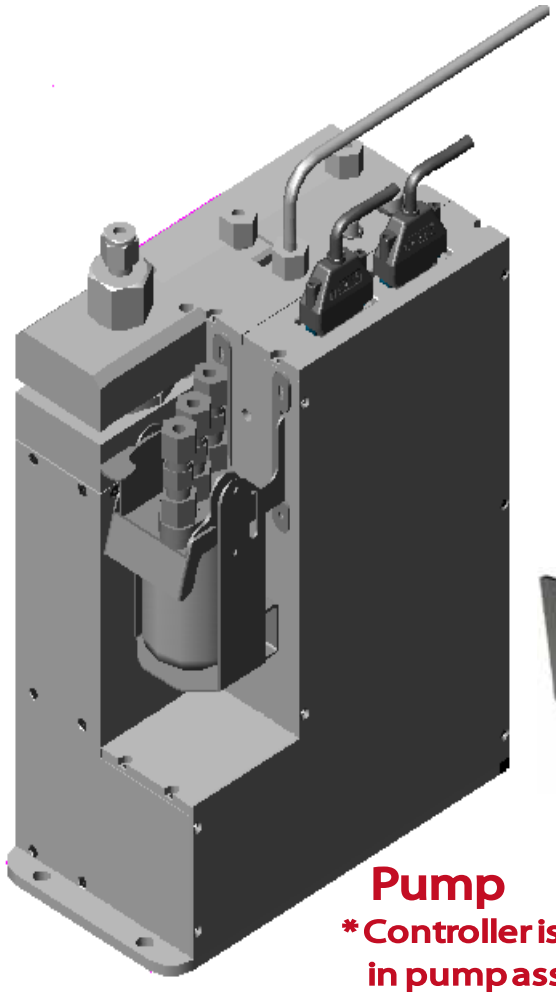

Pump

*Controller is integrated in pump assembly



Touch Pad

TALON TECHNOLOGY
http://www.talonkorea.com

33-14, Jeongnamdong-ro, Jeongnam-myeon,Hwaseong-si, Gyeonggi-do, Korea (445-964) Tel : 82-70-4887-1260 Fax : 82-31-366-1187

Configuration

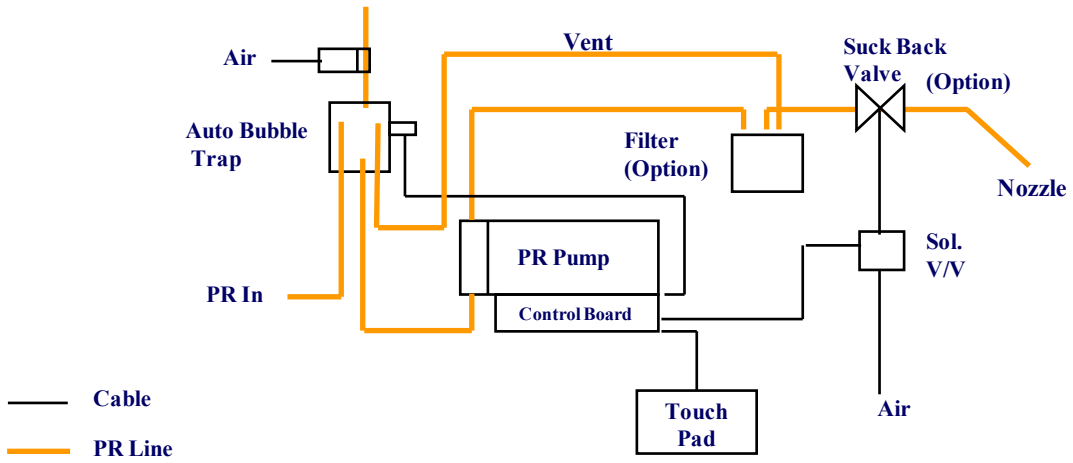

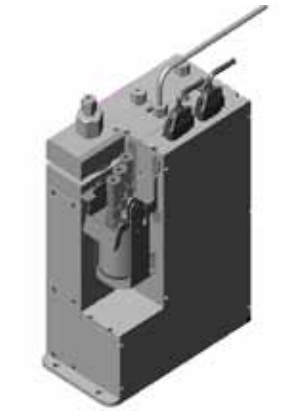

Specifications

ITEM	DESCRIPTION	
Process		
Dispense Volume Range	0.5cc ~ 7.0cc	
Dispense/ Reload Rate	0.1cc/sec ~ 7.0cc/sec	
Dispense Volume Resolution	0.0025cc	
Dispense Repeatability	≤±0.02(2.2cp, 23℃)	
Viscosity	Max: 150cp (with filter)	
Utility		
Electric Power	24VDC/1A	
Air	0.1~0.3Mpa	
Resist In/ Out	1/4 Inch Teflon	
Hardware		
Weight	Touch Pad	0.64kg
	Pump	6.46kg
Dimension (W)×(L)×(H)mm	Touch Pad	140×44×88
	Pump	120×228×325

Characteristics

