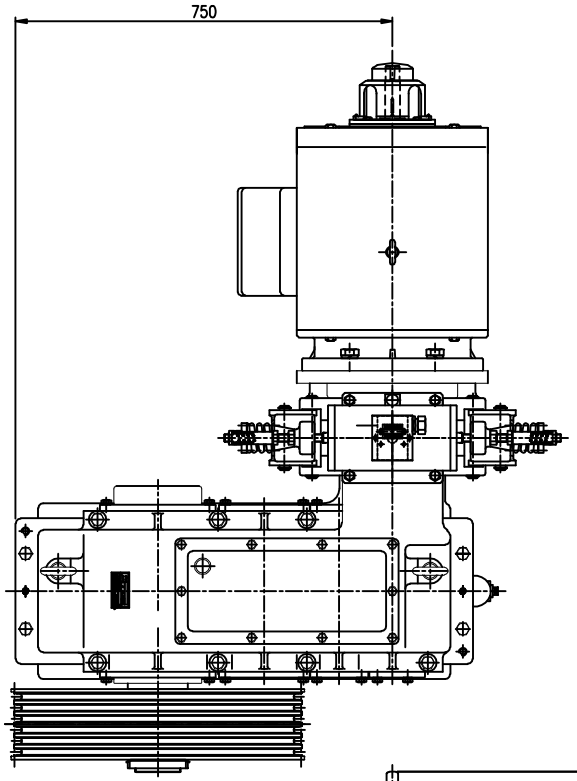

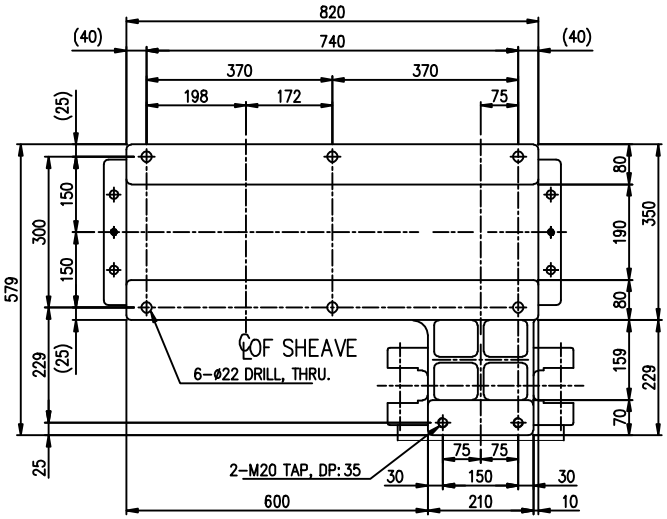

VIEW "M"

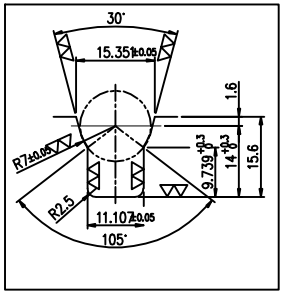

DETAIL OF GROOVE(ø14)

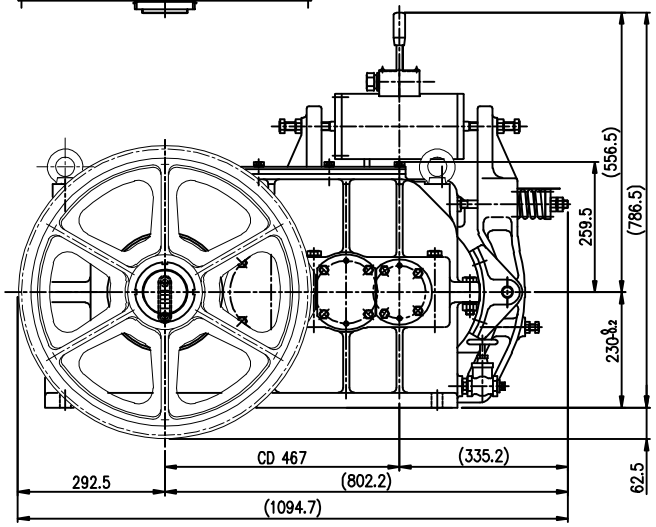

"M"

