

082 SERIES

HIGH-PRESSURE REGULATOR





FUNCTIONAL SCHEMATIC

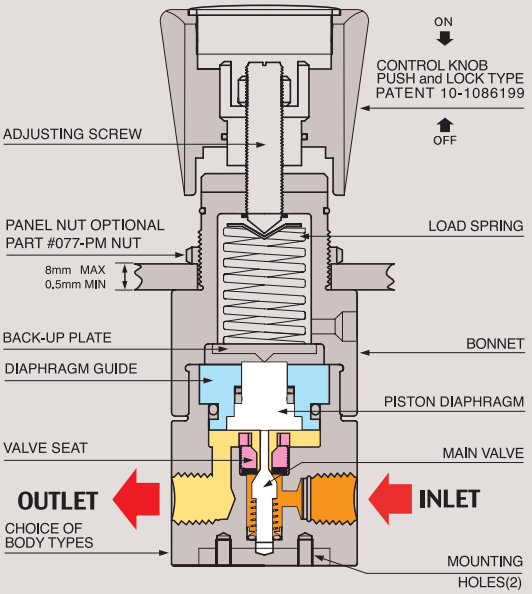

FLOW CHART

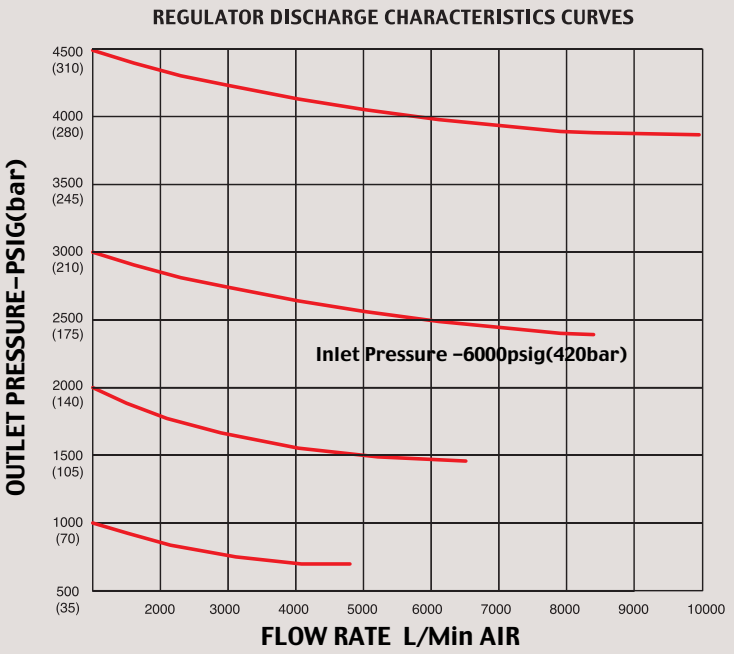

HIGH-PRESSURE REGULATOR

082 SERIES

082 시리즈는 고압가스와 액체 등에서도 안전하고 안정적으로 사용할 수 있도록 드라스타만의 Piston- Diaphragm 방식을 개발하여 더욱 더 안전하게 사용할 수 있습니다, 본체와 내부의 모든 부품은 Stainless steel 316L로 이루어져 부식성 가스 또는 액체 등에서 안심하고 사용할 수 있도록 하였으며, 입구 압력은 6000psig〈420bar〉이고 출구 압력은 최대 3000psi 〈210bar〉 까지 사용 할 수 있으며 1/4″ NPT type 4-Ports Regulator입니다. 모든 DRASTAR Regulators는 외부적인 진동과 가스배관 라인의 미세 진동 등으로 인하여 초기 셋팅 값이 스스로 변하는 현상를 완전히 해결한 드라스타만의 Push and Lock 타입의 조절 손잡이를 적용하여 사용하기에 더욱 편리합니다. 조절 손잡이를 누르면 셋팅값이 변하는 것을 방지하며, 손잡이를 앞으로 당기면 자유롭게 원하는 압력으로 다시 셋팅 할 수 있는 드라스타만의 특허 10-1086199 Push and Lock 타입의 레귤레이터입니다.

082 Series gas regulators are specially designed to regulate the high pressure gases safely. As the product' s body and all internal parts are made of stainless steel 316L(082S Series) that is strong for corrosiveness and liquid and brass (082B Series), they can be also used for ultra-pure six-nine(99.9999) gases. As these models can be connected by 4-ports 1/4″ FNPT, they are suitable for semi-conductor equipment production line and ultra-precision plumbing line. max. inlet pressure is 6000 psig(420 bar) and outlet pressure, 1000 psi(70 bar), 2000 psi(140 bar), and 3000 psi(210 bar).DRASTAR regulators are designed and manufactured for easier operation by equipping with the DRASTAR' s own developed push and lock type handle which completely prevents the self-change of pre-set value which can be caused by the vibration from

SPECIFICATIONS

Ports	1/4″ 4-ports NPT type
Leak Rate Certification	to 2x10^{-8} atm cc/sec Helium available.
Body Materials	082S-0000-1S / Stainless steel 316L 082B-0000-1S / Brass
Bonnet Materia	Nickel Plated Forged Brass / Stainless steel 316L
Main Valve	Stainless steel 316L
Valve Spring	Stainless steel 316L
Valve Seat	Teflon® (Kel-F, Polyimide, etc.. Optional)
Inlet Pressure Range	6,000psig(420bar)
Outlet Pressure Ranges	1000(70bar), 2000(140bar), 3000psig(210bar), 4500psig(310bar)
Self-Venting	082X-0000-1S-V, Optional
Operating Temperature	-40°C - +70°C(-40°F - +160°F) (standard) 082S-0000-1S-H1, +120°C (Optional) 082S-0000-1S-H2, +250°C (Optional)
Flow Capacity	Cv=0.06 (Cv=0.2 etc.. Optional)
Standard Optional	CGA, Inlet and Outlet Gauges, etc..

INSTALLATION DIMENSIONS

METRIC EQUIVALENTS ARE IN PARENTHESES

▪ GAUGE PORT OPTIONS

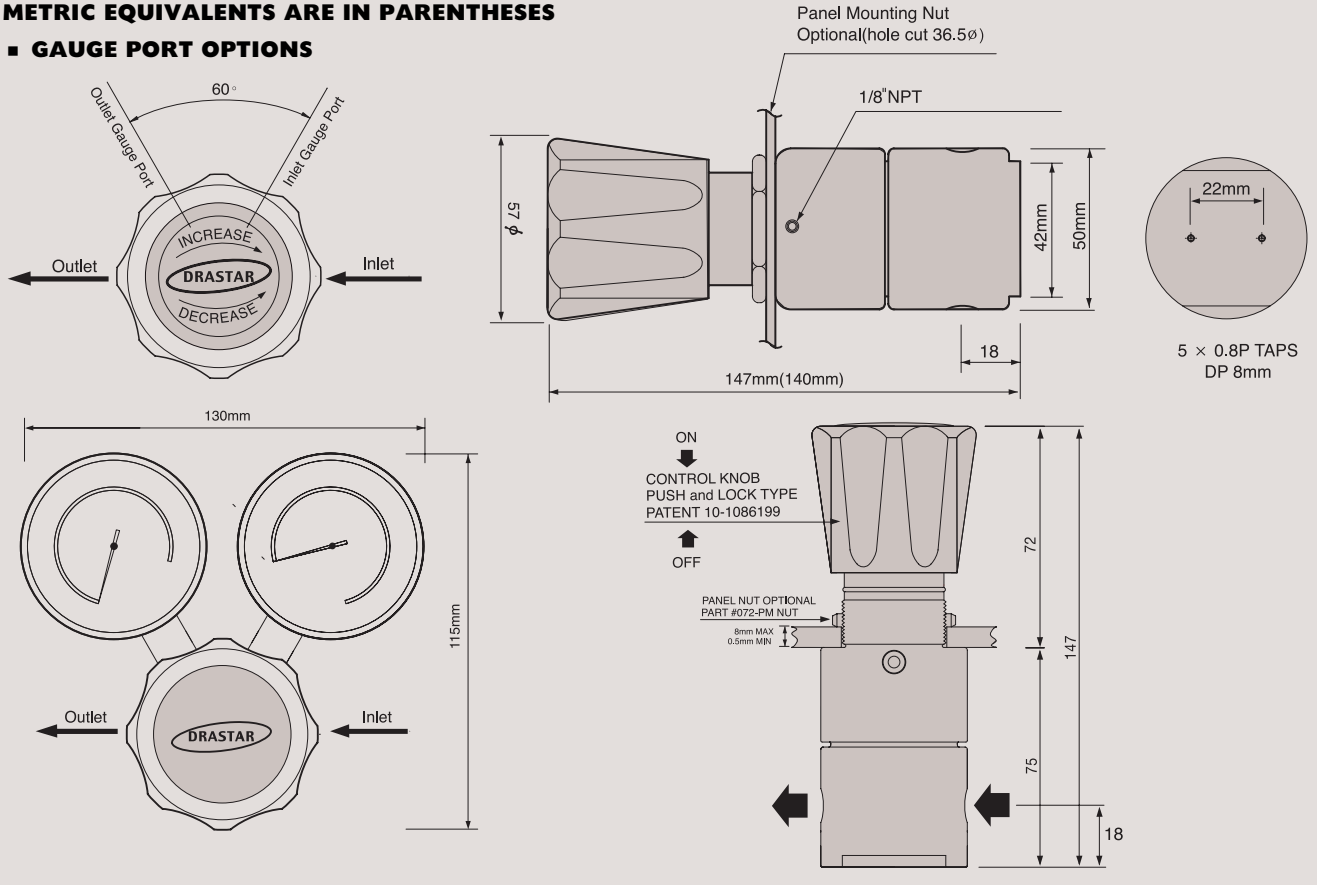

outside or minute vibration at the gas pipeline. You can prevent the self-changing of pre-set value just by pushing the handle and reset the value freely by drawing the handle. DRASTAR has created and applied patent for this push and lock system for DRASTAR regulators (patent number 10-1086199).

Features

- Piston- Diaphragm Type Regulator of 1/4″ NPT Type
- Suitable for the High-Pressure Regulator
- Inlet 6000psig(420bar)
- Outlet 1000(70bar), 2000(140bar), 3000(210bar)psig, 4500(310bar)
- Panel mounting nut option

권장 사항

각 제품들은 최고의 안전성과 쉬운 조작성을 고려하여 제작되었습니다. 그러나 가장 안전하고 효율적인 Regulator 사용을 위해서는 실제 사용 압력을 각각 모델의 사용 압력에 25%~75% 이내에서 사용하면 가장 이상적인 압력을 사용할 수 있습니다, 정밀하고 원활한 동작과 제품의 수명 연장을 위해서는 위의 범위 내에서 사용하기를 적극 권장합니다.

Recommendations

Each product is manufactured since being taken into consideration of the best safety and easy manipulation. However in order to use the regulator in most safe and effective way, you are recommended to use the actual pressure within the range of its 25% ~ 75%. For making precise, smooth movement and to prolong product life, strongly recommended to make a use within above mentioned range.

ORDERING INFORMATION

082	S	-	1000	-	1S	H	-	V	-	H1

BASIS SERIES NUMBER	BODY MATERIAL	OUTLET PRESSURE RANGE	FLOW CAPACITY	DIAPHRAGM MATERIAL	SELF VENTING	HIGH TEMPE-RATURE
Standard Inlet Pressure 6000psig (420 bar)	B = Brass S = Stainless Steel 316L	1000 = 10-1000psi (7-70bar) 2000 = 20-2000psi (15-140bar) 3000 = 30-3000psi (20-210bar) 4500 = 30-4500psi (30-310bar)	1 = 1/4″ Female NPT 1S = Cv 0.06 Standard 1O = Cv 0.2 Optional	STS 316L Standard H = Hastelloy-C Optional	V = Self-Venting Optional	H1 = 120° C H2 = 250° C Optional

This is revision by Jan of 2016

082 SERIES PART LIST

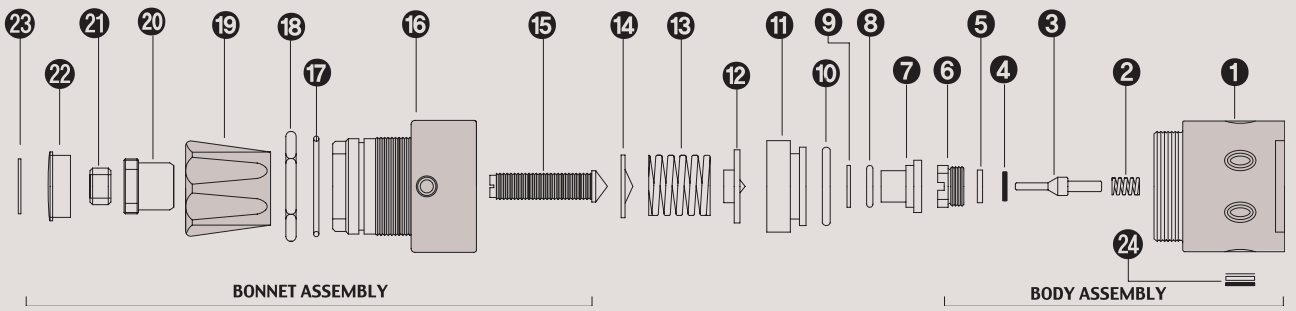

STANDARD MODEL SERIES

Item No.	Description	Part No.	Model Application
01	Body	082-02-01	02-01 Stainless Steel 316L / 02-02 Brass Body / 02-03 Monel
02	Valve Spring	082-04-01	04-01 STS 316L / 04-03 Hastelloy C-22 / 04-04 Monel
03	Main Valve	082-06-01	06-01 STS 316L / 06-03 Hastelloy C-275 / 04-04 Monel
04	Valve Seat	082-10-01	10-01 PFA / 10-05 Vespel / 10-06 Peek
05	Valve Seat Cartridge	082-08-01	All Model Same
06	Locking Screw	082-12-01	All Model Same
07	Piston Diaphragm	082-18-01	All Model Same
08	Piston Diaphragm O-ring	082-18-00	All Model Same
09	Diaphragm Teflon Ring	082-18-00	All Model Same
10	Diaphragm Guide O-ring	082-18-00	All Model Same
11	Piston Diaphragm Guide	082-20-01	20-01 Series Stainless steel 316L / 20-02 Brass
12	Spring Plate	082-30-01	All Model Same
13	Load Spring	082-38-01	38-08 1000psi / 38-09 2000psi / 38-10 3000psi / 38-11 4500psi
14	Pivot	082-40-01	All Model Same
15	Adijusting Screw	082-42-01	All Model Same
16	Bonnet	082-44-02	44-02 Brass / 44-01 Stainless steel 304 Bonnet Optional
17	Push & Lock O-Ring	082-46-01	All Model Same
18	Panel mount Nut	082-48-01	All Model Same
19	Control Knob	082-50-01	50-01 ABS / 50-04 Aluminum Control knob Optional)
20	Push & Lock Handle nut	082-52-01	All Model Same
21	Locking Nut	082-54-01	All Model Same
22	Name Cap	082-56-01	56-01 ABS
23	Name Cap Plate	082-58-07	58-08 1000psi / 58-09 2000psi / 58-10 3000psi / 58-11 4500psi
24	Filter Assembly	082-60-02	All Model Same