PDV

Direct Drive Power Vise



■ Step-jaw precision power vise with adjustable torque

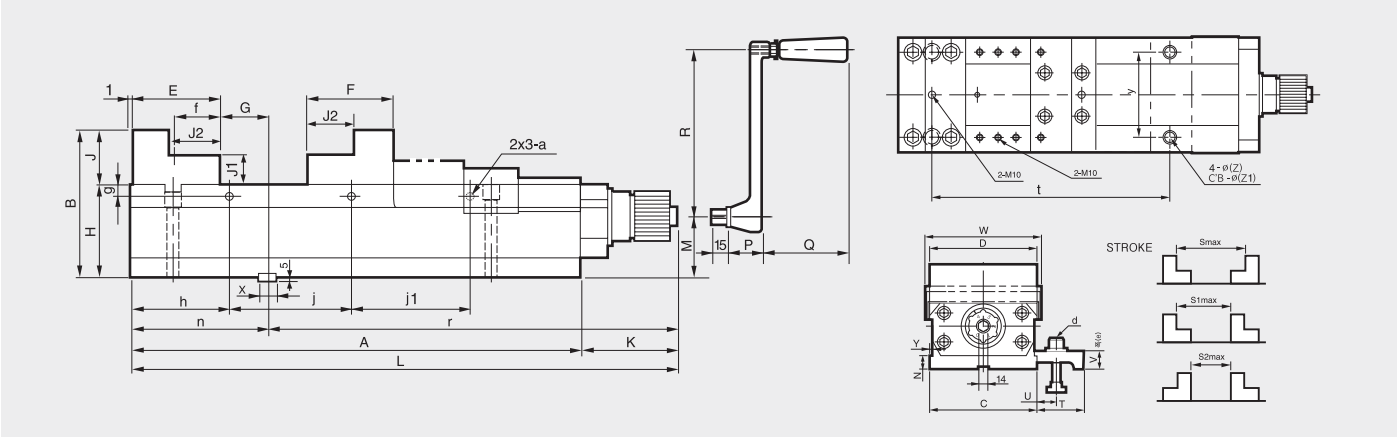

Dimensions

	A	B	C	D	E	F	G	H	J	J1	J2	K	L	M	N	P	Q	R	S	S1	S2
PDV-100(4")	295	115	101	100	73	64	38.5	75	40	20	35	105.5	400.5	43	15	37	95	180	220	185	150
PDV-125(5")	400	135	126	125	84	76	60	85	50	25	45	105.5	505.5	50	21	37	95	180	320	275	230
PDV-160(6")	490	160	161	160	94	86	50	100	60	30	50	105.5	595.5	65	21	37	95	180	400	350	300
PDV-200(8")	533	180	202	200	102	98	74	110	70	35	50	105.5	638.5	75	21	37	95	180	420	370	320

	T	U	V	W	X	Y	a	b	e	f	g	h	j	j1	n	r	t	y	z	z1
PDV-100(5")	60	14~26	22.5	107	14	6	M10	M12x45	35	36.5	12	95	105	-	112.5	288	212	76	11	17
PDV-125(5")	72	15~31	30	135	18	6	M10	M16x65	45	42	12	95	105	105	145	360.5	321	92	11	17
PDV-160(6")	72	15~31	30	170	18	7	M10	M16x65	45	47	12	105	140	140	145	450.5	255	122	17	25
PDV-200(8")	72	15~31	30	214	18	7	M10	M16x65	45	51	12	126	141	141	177	461.5	375	150	17	25

Specifications

Type	Jaw Width	Jaw Height	Max. Opening	Total Height	Slider Height	Total Width	Total Length	Max.Gripping Force	Weight
	[mm]	[mm]	[mm]	[mm]	[mm]	[mm]	[mm]	[kN(kgf)]	[kgf]
PDV-100(4")	100	40	220	115	75	107	400.5	25(2551)	25
PDV-125(5")	125	50	320	135	85	135	505.5	35(3571)	43
PDV-160(6")	160	60	400	160	100	170	595.5	60(6122)	65
PDV-200(8")	200	70	420	180	110	214	638.5	60(6122)	100

※ Specifications are subject to change without notice.