DOOSAN

*Optimal Solutions for the Future*

# DCM series




**Double Column Machining Center**

**DCM series**

DCM 2740/2750
DCM 2760/2780
DCM 3250/3260/3280
DCM 3780/37100

**ver.** EN 160502 SU

**Basic information**

Broad Range of Machining Capabilities

High-Precision Mold Machining Performance

Convenient Machining Functions

**Machine Information**

Standard/Optional Specifications

Machine Specifications

**Customer Support**



# **DCM** series

**The DCM series is a multi-purpose double column machining center for applications such as heavy duty machining of large parts and high precision dies and molds. Designed with the highest specifications in its class, the DCM series provides a broad range of machining capabilities and optional equipment, together with many convenient functions for the operator.**




## Contents

**02 Product Preview**

**Basic information**

**04** Broad Range of Machining Capabilities
**14** High-Precision Mold Machining Performance
**16** Convenient Machining Functions

**Machine Information**

**20** Standard/Optional Specifications
**28** Machine Specifications

**30 Customer Support**

## Broad Range of Machining Capabilities

- The best specifications in its class – effective width between columns has been further extended by 200 mm(7.9 inch) for increased machining capacity.
- A variety of different ram spindle specifications and a wide range of auto-change attachments support many types of machining applications, from simultaneous 5 axis processing of dies/molds to heavy duty cutting.

## High-Precision Mold Machining Performance

- Adoption of the DSQ I/II/III functions, X/Y/Z/W axes linear scale, or X/Y/Z axes ball screw shaft cooling as options enables the machining of high-accuracy molds and general parts.

## Convenient Machining Functions

- The machining center provides a 5-face machining support system for very large and heavy workpieces, easy setup guidance, easy pattern cycles, work load counter control, intelligent machining control and process monitoring function.




# High-Rigidity, High-Precision Structure, Multi-purpose Double Column Machining Center

**Optimal Solutions**

### Wide Machining Specifications

The best specifications in its class –effective width between column has been further extended by 200 mm(7.9 inch) for increased machining capacity.

### Diverse Ram Spindles

A variety of different ram spindle specifications and a wide range of auto-change attachments support many types of machining applications, from simultaneous 5 axis processing of dies/molds to heavy duty cutting.

### Various Auto-Change Head Attachments

A diverse range of auto change head attachments enables a wide variety of applications to be processed, including machining of 5 faces ,angled faces using 1 degree index and simultaneous 5 axis cutting

## High-rigidity, High-precision Structure

Designed for large work pieces, the machine enables long-term, heavy-duty cutting with stable machining accuracy.

### Bed and Column Structure

The structure of the DCM series minimizes the effects of vibration on workpieces under loads produced by both vertical and horizontal cutting during machining of 5 faces. Symmetrical structure design and the application of effective compensation reduces thermal displacement during machining.
The bed is made of an M-type cast structure excellent for vibration absorption to ensure a high level of machining accuracy.
The column provides extremely high rigidity thanks to its square-structured latticed-rib casting, which is excellent for vibration damping, and wide box guideways that are heat-treated and precision-ground.
The integrated column design provides a high degree of machining accuracy at all heights from the machine table, from heavy duty cutting to high precision finishing.

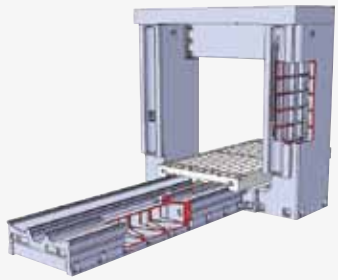

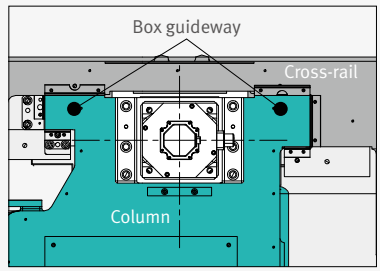




### Cross-rail Structure

The guide-structure of the cross-rail supports the kinetic load of the saddle and ram spindle to maintain a high degree of accuracy for every type of work from heavy-duty cutting to finish cutting.
In addition, the hybrid-type structure combined with roller bearings and gibs enables smooth traveling.
The cast structure optimized for vibration damping, and the wide box guideway heat-treated and precision-ground are composed of highly rigid, square, sliding surfaces.

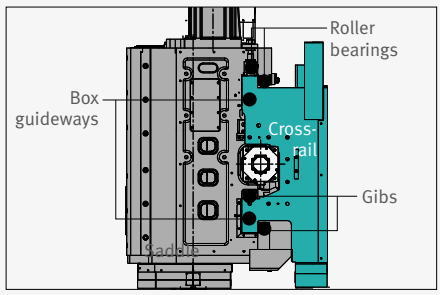


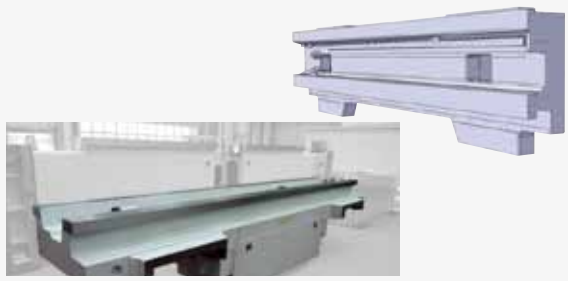

### Bed and Table Structure

The bed supports traveling motion with four rows of heat-treated, precision-ground guideways.
A roller bearing pack for heavy-duty cutting and slide bearings for effective vibration damping are equipped at the bottom of the table to ensure a high level of cutting accuracy.

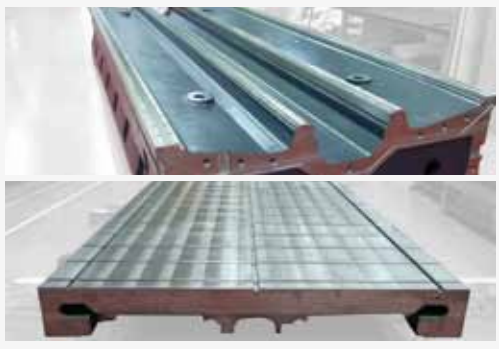

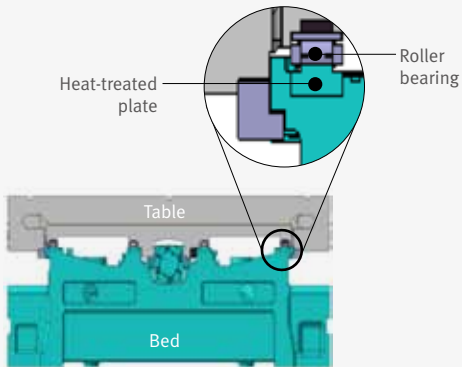

## Wide Machining Specifications

The best specifications in its class – effective width between columns has been further extended by 200 mm(7.9 inch) for increased machining capacity.

### X x Y x Z x W axes Travel

X-axis **4250 / 5250 / 6250 / 8250 / 10250 mm (167.3 / 206.7 / 246.1 / 324.8 / 403.5 inch)**

Y-axis **3200 / 3700 / 4200 mm (126.0 / 145.7 / 165.4 inch)**

Z-axis **700 mm (27.6 inch), 1000 mm (39.4 inch)** option

W-axis **1100 mm (43.3 inch), 1450 mm (57.1 inch)** option

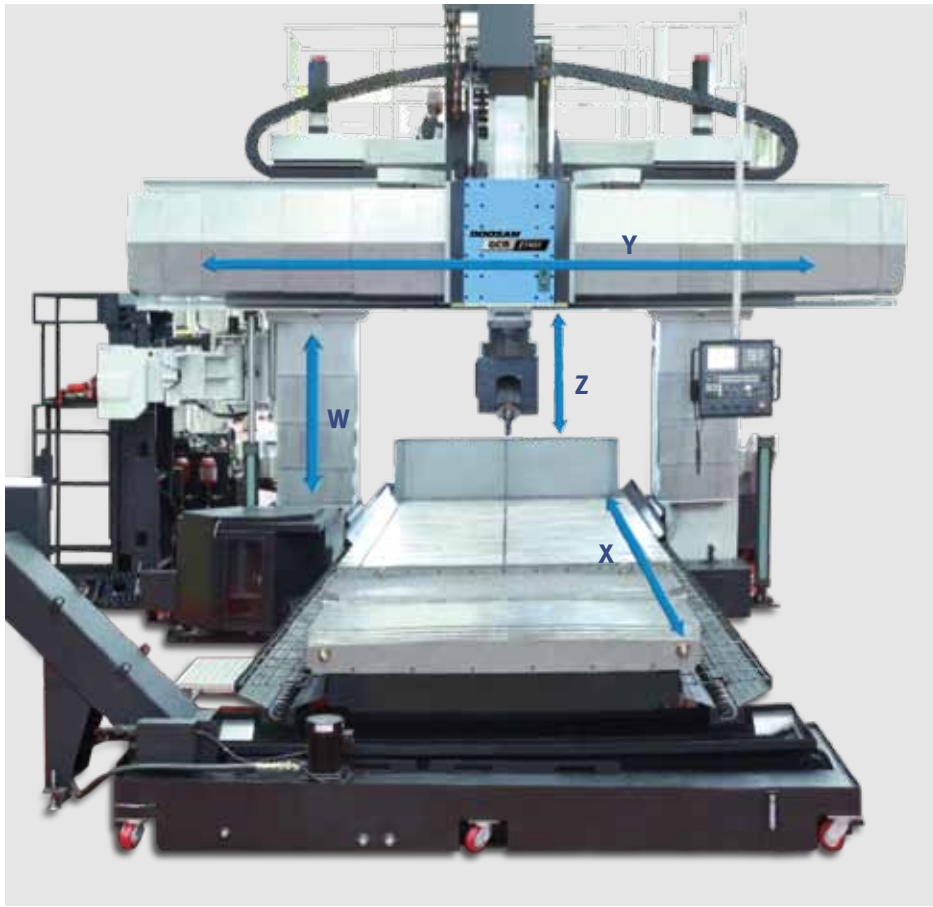


### Table Load Capacity

DCM 2740 **18000 kg (39682.6 lb)**
DCM 2750 **20000 kg (44091.8 lb)**
DCM 2760 **28000 kg (61728.5 lb)**
DCM 2780 **36000 kg (79365.2 lb)**
DCM 3250 **30000 kg (66137.7 lb)**
DCM 3260 **36000 kg (79365.2 lb)**
DCM 3280/3780/37100 **40000 kg (88183.6 lb)**

### Rapid Traverse

| | |
|---|---|
| X-axis | 16 m/min(629.9 ipm) |
| Y-axis | 16 m/min(629.9 ipm) |
| Z-axis | 10 m/min(393.7 ipm) |
| W-axis | 3 m/min(118.1 ipm) |

### Cutting Feedrate

| | |
|---|---|
| X-axis | 10000 mm/min(393.7 ipm) |
| Y-axis | 10000 mm/min(393.7 ipm) |
| Z-axis | 10000 mm/min(393.7 ipm) |
| W-axis | 3000 mm/min(118.1 ipm) option |

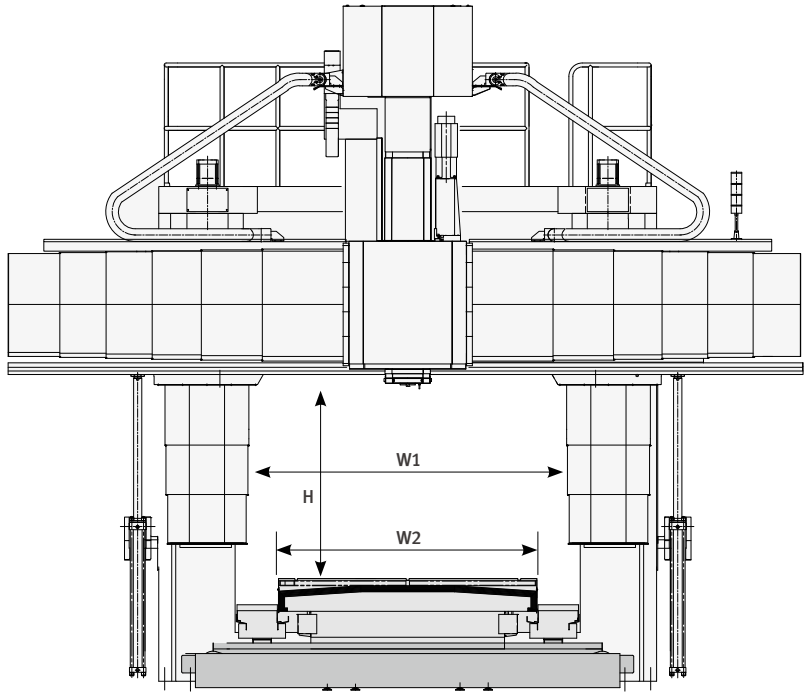


## Effective width between columns W1

**2700 / 3200 / 3700 mm (106.3 / 126.0 / 145.7 inch)**

## Workpiece height H

**1650 mm (65.0 inch)**
**2000 / 2350 / 2700 mm** option
**(78.7 / 92.5 / 106.3 inch)**

## Table size in Y and X axis W2 x L

W2 **2200 / 2700 / 3200 mm (86.6 / 106.6 / 126.0 inch)**

L **4100 / 5100 / 6100 / 8100 / 10100 mm (161.4 / 200.8 / 240.2 / 318.9 / 397.6 inch)**

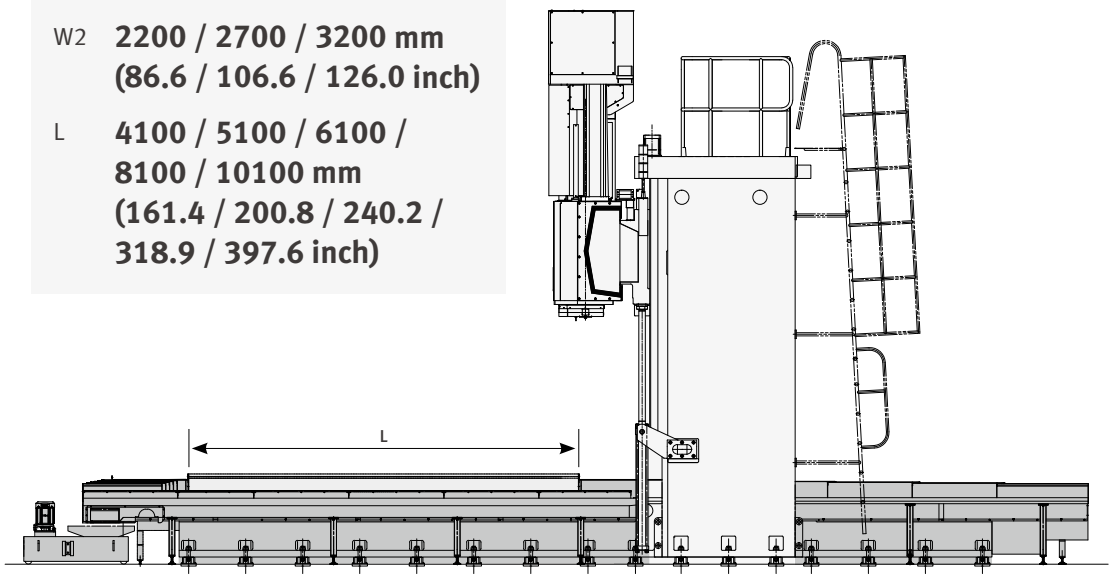

## Diverse Ram Spindles

A variety of different ram spindle specifications support a wide range of applications from heavy duty cutting to high speed / high precision mood machining.

### Adoption of ram spindle and saddle structure to support heavy-duty cutting

The highly rigid, square type box guideway ram has a cross section of 380 x 380mm(14.96 x 14.96 inch), which is the biggest in its class. This ensures optimum heavy duty machining capability in both vertical and horizontal applications.







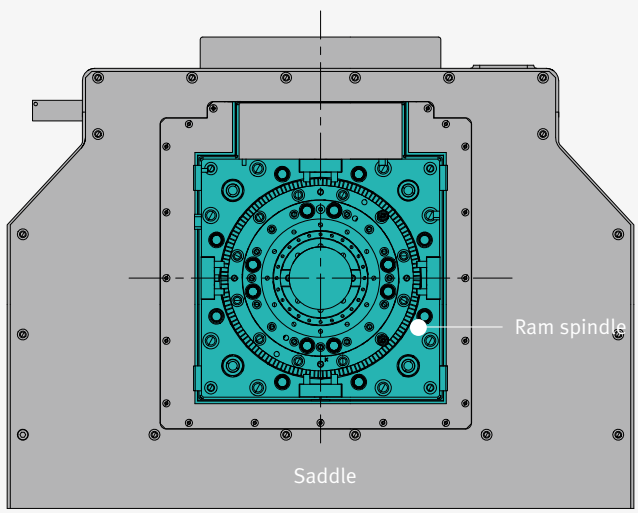


**Stress analysis of ram spindle unit**

The ram spindle unit is designed to maintain ideal conditions under any load through stress analysis.

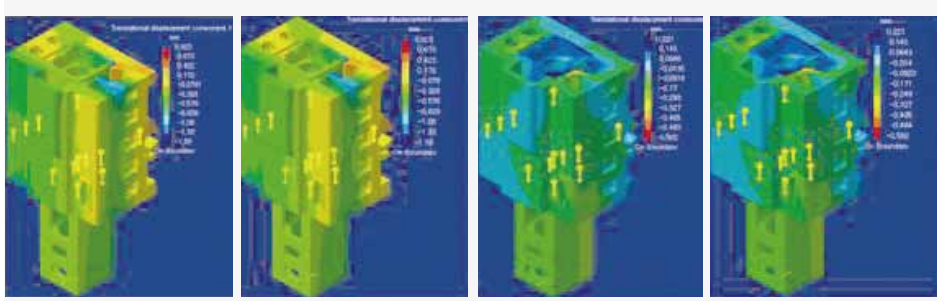

X + direction | X + direction | Y + direction | Y + direction

## Spindle Power – Torque Diagram

The 6000 r/min built-in driven ram spindle is equipped as a standard feature. Optionally, a 12000 r/min, built-in driven ram spindle can be selected when high-speed and high-power cutting capability are required. In addition, a ram spindle driven with a high-torque, 2-step gear shifting is also available as an optional feature for heavy-duty cutting.

### **Standard speed** (built-in driven)

**Spindle speed** **6000** r/min

**Spindle power** **25/22** kW **(33.5/29.5** Hp**)**

**Spindle torque** **600** N·m **(442.8** ft-lbs**)**

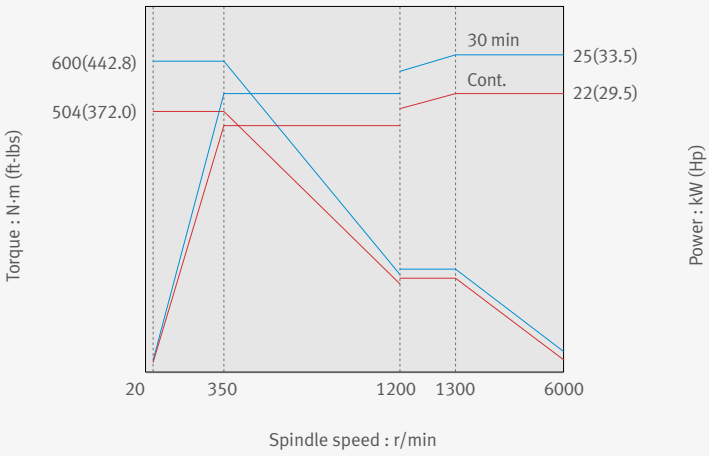


### **High speed** option (built-in driven)

**Spindle speed** **12000** r/min

**Spindle power** **30/25** kW **(40.2/33.5** Hp**)**

**Spindle torque** **419** N·m **(309.2** ft-lbs**)**

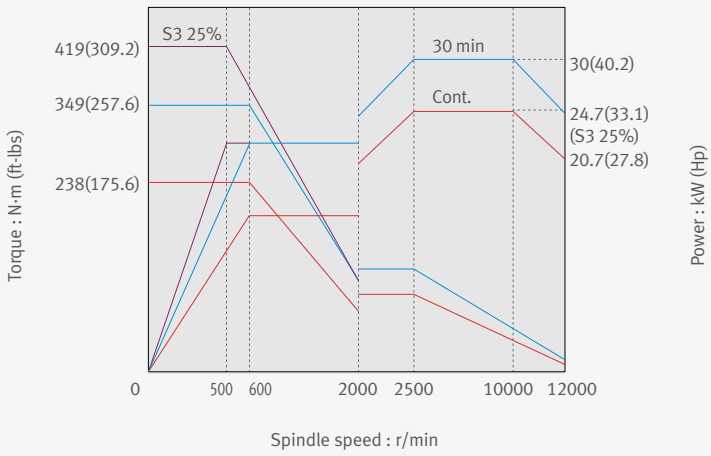


### **Heavy-duty cutting** I option (gear driven)

**Spindle speed** **6000** r/min

**Spindle power** **22/18.5** kW **(29.5/24.8** Hp**)**

**Spindle torque** **646** N·m **(476.8** ft-lbs**)**

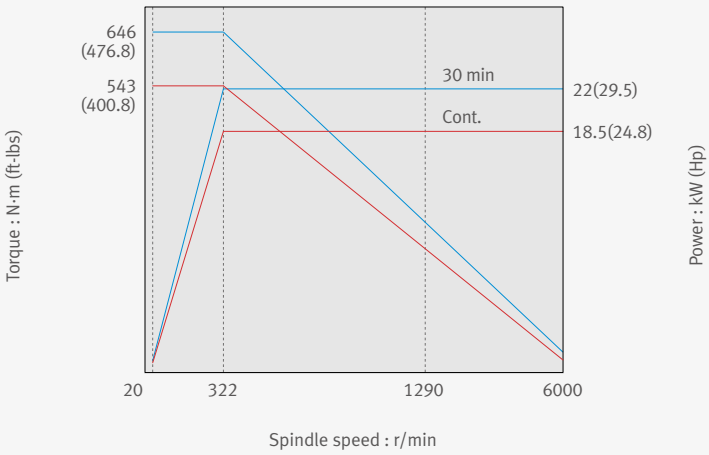


### **Heavy-duty cutting** II option (gear driven)

**Spindle speed** **4000** r/min

**Spindle power** **37/30**kW **(49.6/40.2** Hp**)**

**Spindle torque** **1704** N·m **(1257.6** ft-lbs**)**

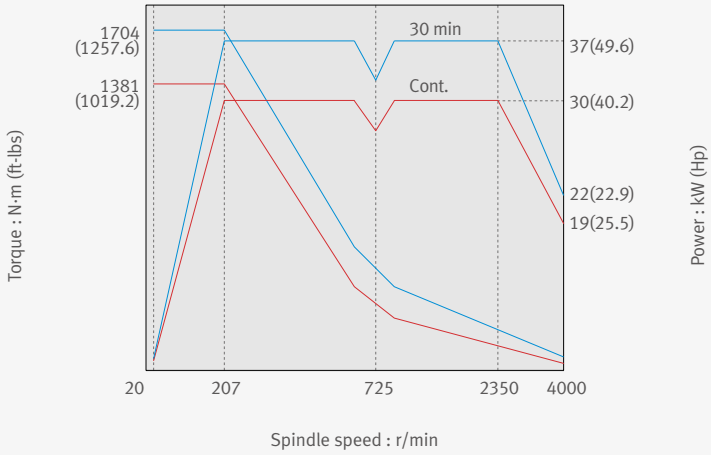

# Various Auto-Change Head Attachments

## Diverse head attachments for a wider range of machining applications





A diverse range of auto-change head attachments enables the machining of a variety of complex shapes, from 5 axis simultaneous processing of Molds to angled faces using 1 degree indexing, as well as 5 face machining. Head indexing is achieved by C axis control through the ram

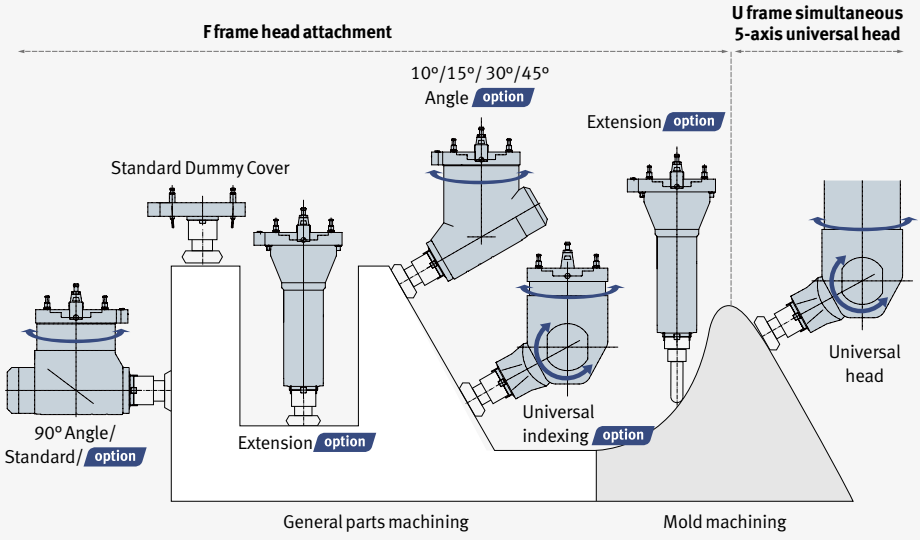


Various utilities are available to keep the same level of performance even when the head attachment is changed.
Provides numerous utilities to ensure the same performance provided by the original ram spindle even after changing a Head Attachment

| Features | Standard Dummy Cover | Extension option | 90° Angle (Standard/ option) |
|---|---|---|---|
| **Spindle Air Curtain** | Standard | Standard | – |
| **Flood Coolant / Air Blow** | Standard | Standard | Standard |
| **Head Attachment Tool Unclamp** | Standard | Standard | Standard |
| **Head Attachment Spindle Air Purge** | Standard | Standard | Standard |
| **TSC (Through Spindle Coolant)** | option | option | option |

※ The provided utility line could be different as choosing the head attachment.
※ When a universal head attachment, 10/15/30/45 degree angle attachment, or U-frame universal head is considered for purchase, please contact Doosan for detailed specifications.

## F Frame Head Attachment

Unit: mm (inch)

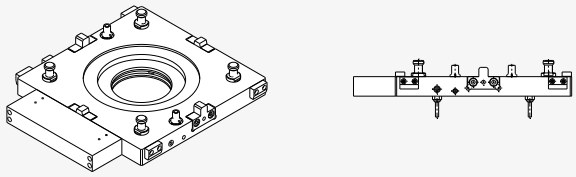

**Standard Dummy Cover**

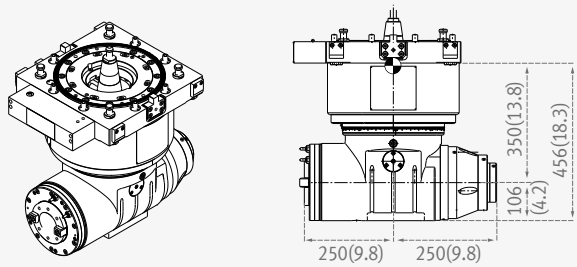


**Standard 90° angle**

- 4000r/min, 22kW(29.5 Hp), min. 5/2.5/1° indexing

**High speed 90° angle** option

- 6000r/min, 15kW(20.1 Hp), min. 5/2.5/1° indexing

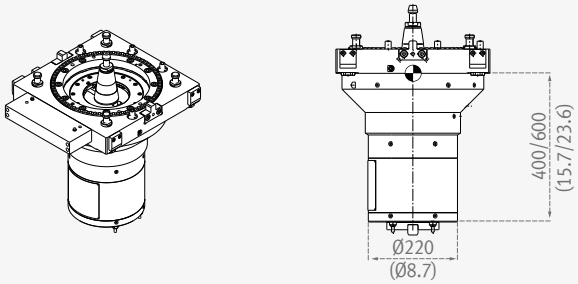


**Extension** option

- 4000r/min, 22kW(29.5 Hp)
- 6000r/min, 22kW(29.5 Hp)

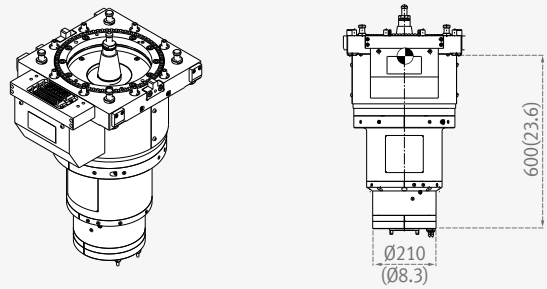


**High-speed extension** option

- 10000r/min, 15/11kW(20.1/14.8 Hp)
- 12000r/min, 15/11kW(20.1/14.8 Hp)

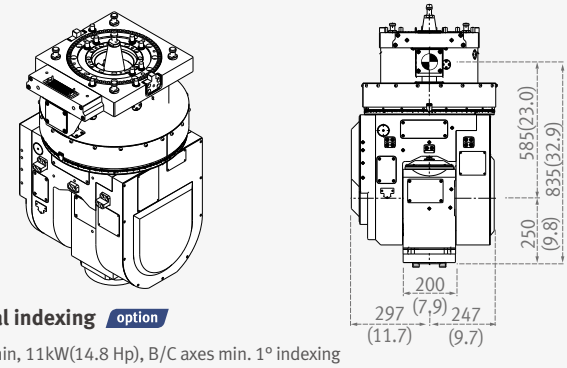


**Universal indexing** option

- 4000r/min, 11kW(14.8 Hp), B/C axes min. 1° indexing

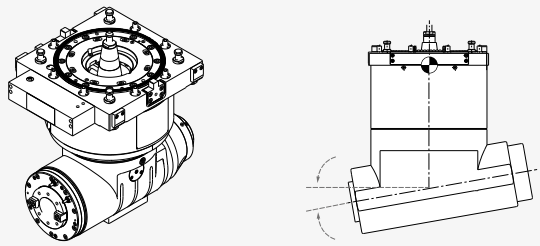

**10°/15°/ 30°/45° angles** option

## U Frame Simultaneous 5-Axis Universal Head

Unit: mm (inch)

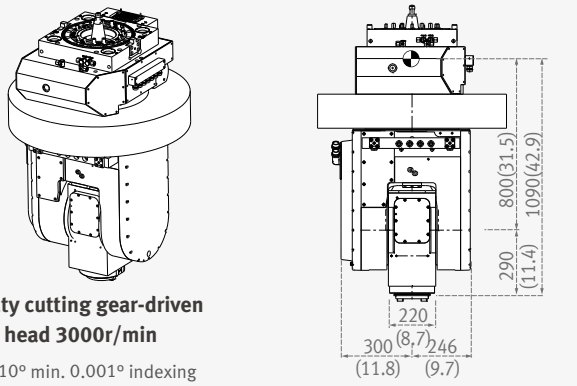


**Heavy-duty cutting gear-driven universal head 3000r/min**

- B axis ±110° min. 0.001° indexing
- C axis ±190° min. 0.001° indexing

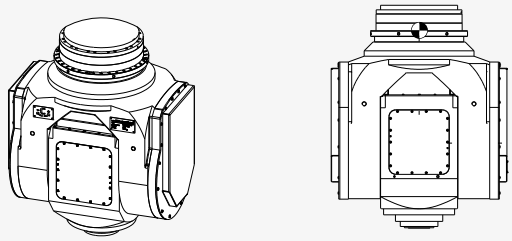

**High-speed, high-precision built-in driven universal head 12000r/min**

- B axis 0.001° indexing
- C axis 0.001° indexing

# Automatic Head Attachment Changer (AAC)

## Standard AAC – 2 Stations

Two types of head attachment including dummy cover and 90° angle are equipped as a standard feature to minimize the time required to change a head attachment.



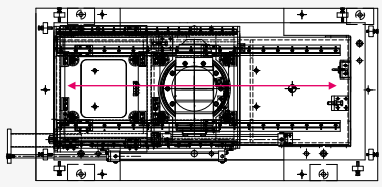


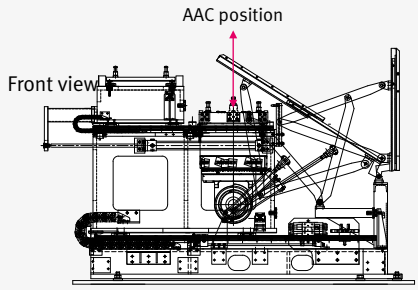


## Rotary type AAC – 3 Stations option

Three head attachments are optionally available. The head attachments are changed using a rotary method, thus minimizing the changing time.



Top view

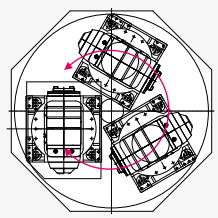

Front view

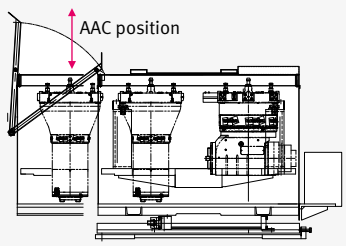


## Linear Shuttle type AAC - 3/4/5/7 Stations option

Optionally 3, 4, 5, or 7 head attachment can be equipped.



Top view

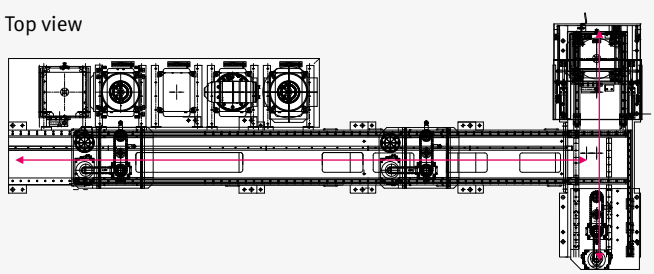

Front view

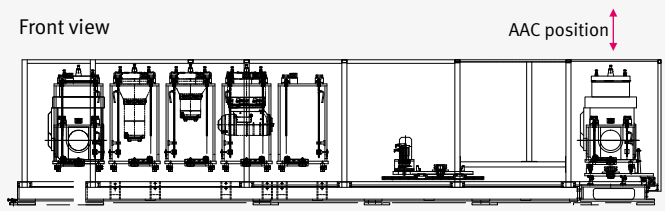

## Heavy-duty Cutting Capacity

**Face mill**

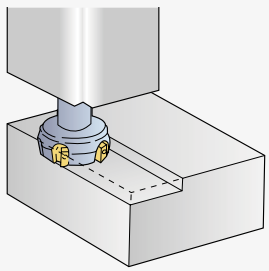

Material: SM45C (Carbon steel)

| Ram spindle line-up | Cutter Dia. | Cutting Width | Cutting Depth | Spindle Speed | Feedrate | Chip removal rate |
|---|---|---|---|---|---|---|
| Heavy-duty cutting option I | Ø160 mm (6.3 inch) | 112 mm (4.4 inch) | 7 mm (0.3 inch) | 315 r/min | 665 mm/min (26.2 ipm) | 521 $cm^3$/min (31.8 $inch^3$/min) |
| Heavy-duty cutting option II | Ø160 mm (6.3 inch) | 140 mm (5.5 inch) | 6 mm (0.2 inch) | 315 r/min | 1080 mm/min (42.5 ipm) | 907 $cm^3$/min (55.3 $inch^3$/min) |
| Material: GC300 (Cast iron) | | | | | | |
| Heavy-duty cutting option I | Ø160 mm (6.3 inch) | 112 mm (4.4 inch) | 6 mm (0.2 inch) | 315 r/min | 1188 mm/min (46.8 ipm) | 798 $cm^3$/min (48.7 $inch^3$/min) |
| Heavy-duty cutting option II | Ø160 mm (6.3 inch) | 140 mm (5.5 inch) | 8 mm (0.3 inch) | 315 r/min | 1404 mm/min (55.3 ipm) | 1572 $cm^3$/min (95.9 $inch^3$/min) |

**End mill**

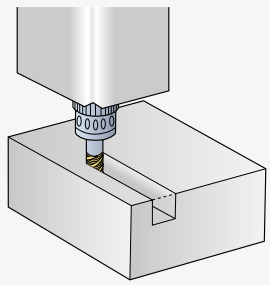

Material: SM45C (Carbon steel)

| Cutter Dia. | Cutting Width | Cutting Depth | Spindle Speed | Feedrate | Chip removal rate | Ram spindle expansion |
|---|---|---|---|---|---|---|
| 63 mm (2.5 inch) | 63 mm (2.5 inch) | 31.5 mm (1.2 inch) | 495 r/min | 312 mm/min (12.3 ipm) | 619 $cm^3$/min (37.8 $inch^3$/min) | 325 mm (12.8 inch) |
| Material: GC300 (Cast iron) | | | | | | |
| 63 mm (2.5 inch) | 63 mm (2.5 inch) | 63 mm (2.5 inch) | 360 r/min | 200 mm/min (7.9 ipm) | 794 $cm^3$/min (48.5 $inch^3$/min) | 325 mm (12.8 inch) |

* The results, indicated in this catalogue are provides as example. They may not be obtained due to differences in cutting conditions and environmental conditions during measurement.

## High-precision Mold Machining



**Rail-shape Prastic toy (injection mold)**

| | |
|---|---|
| **Model** | DCM 2740F |
| **Material** | KP4M |
| **Workpiece size** | 1000 mm x 700 mm x 400 mm (39.37 inch x 27.56 inch x 15.75 inch) |
| **Machining time** | 10H (finishing) |



**4-Door Sedan Door Trim (press mold)**

| | |
|---|---|
| **Model** | DCM 3250F |
| **Material** | KP4M |
| **Workpiece size** | 1500 mm x 1000 mm x 500 mm (59.06 inch x 39.37 inch x 19.69 inch) |
| **Machining time** | 80H (finishing) |

Product Preview

Basic information
Broad Range of Machining Capabilities
High-Precision Mold Machining Performance
Convenient Machining Functions

Machine Information
Standard/Optional Specifications
Machine Specifications

Customer Support

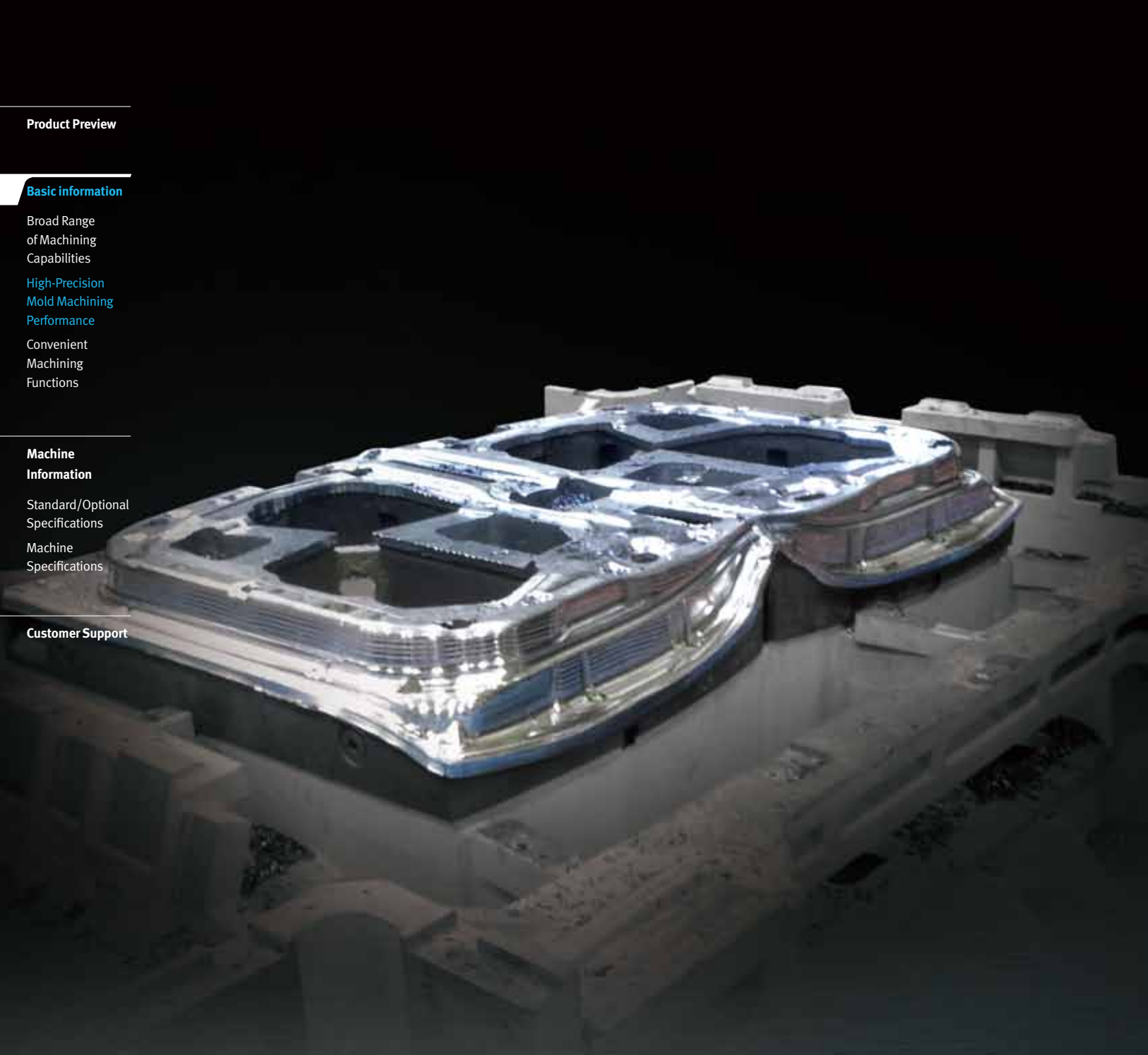

# High-Precision Mold Machining

**Adoption of the DSQ I/II/III functions, X/Y/Z/W axes linear scale, or X/Y/Z axes ball screw shaft cooling as options enables the machining of high-accuracy molds and general parts.**

**Optimal Solutions**

- **DSQ I/II/III functions**
- **X/Y/Z/W axes linear scale**
- **X/Y/Z axes ball screw shaft cooling**

## High-Precision Mold Machining

### High-speed, High-precision Contouring Control

- DSQI(AICCII _ 200 Block + Machining condition selection function)
- DSQII(DSQI + Data server [1GB]) option
- DSQIII(DSQII + High speed processing _ 600 Block) option

* DSQ : Doosan Super Quality




**Cutting condition selection function**

| Cutting condition | R1 | R2 | R3 | R4 | R5 | R6 | R7 | R8 | R9 | R10 |
|---|---|---|---|---|---|---|---|---|---|---|
| Quality | Normal | | | | | | | | | Excellent |
| Tool life | Long | ← | | | | | | | | Normal |
| Application | High-speed roughing | | | | | | | | | High-precision finishing |

- Use the R code in the program to change the cutting condition by up to 10 steps.
  - Improved productivity (high-speed roughing, high-precision finishing)
- Various servo-related NC parameters such as acceleration and deceleration time constants and maximum cutting feed can be set automatically.

### Head Attachments and Universal Head Specialized for Mold Machining

Optimized mold machining can be achieved by selecting various head attachments and ram spindles specialized for diverse mold shapes and high-speed mold machining.

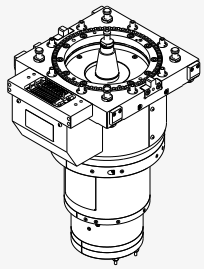

**High-speed extension** option

10000r/min, 15kW(20.1Hp)
12000r/min, 15kW(20.1Hp)

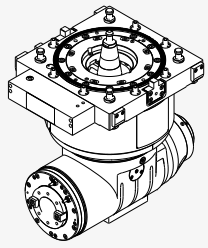

**High-speed 90° angle** option

6000r/min, 15kW(20.1Hp),
min 5/2.5/1° indexing

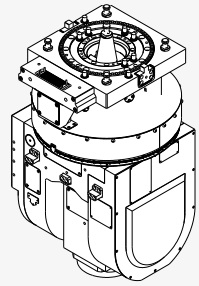

**Universal indexing** option

4000r/min, 11kW(14.8Hp),
B/C axes min. 1° indexing

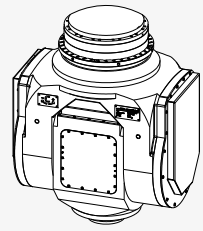

**High-speed, high-precision built-in driven 5-axis simultaneous universal head 12000r/min**

B axis 0.001° indexing
C axis 0.001° indexing

### X/Y/Z/W-axis Linear Scale Feedback System option

The linear scale feedback system provides high positioning accuracy in the X, Y, Z, and W axes.



### X/Y/Z-axis Ball Screw Shaft Cooling option

The heat generated in the ball screw is removed by a high-efficiency cooler to minimize thermal deformation of the ball screw.
For faster removal of frictional heat, a hollow ball screw shaft through which the coolant oil flows is equipped.

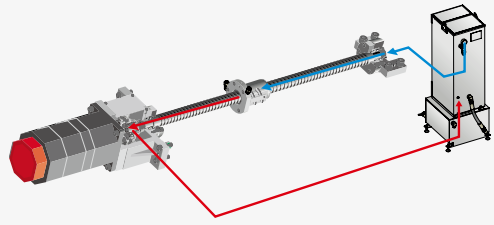



# Convenient Machining Functions

**The DCM series provides a support system for 5 face machining of large and heavy workpieces, easy setup guidance, easy pattern cycles, workload counter control, intelligent machining control and process monitoring system**

**Optimal Solutions**

- 5-face machining support system
  Easy setup guidance
- Easy pattern cycle
- Work load counter control
- Intelligent machining control
- Process monitoring function
- Maintenance management function
- Enhanced operator's convenience

## 5-face machining support system

### Supporting functions for 5-face machining

- 3-dimentional-work coordinates conversion system
- Tool end point shift within work coordinate system
- AAC control and head attachment position control by M-Code
- ATC is applicable for various head attachments.

※ These functions are provided as a standard package when the 5 face machining head attachment is supplied.

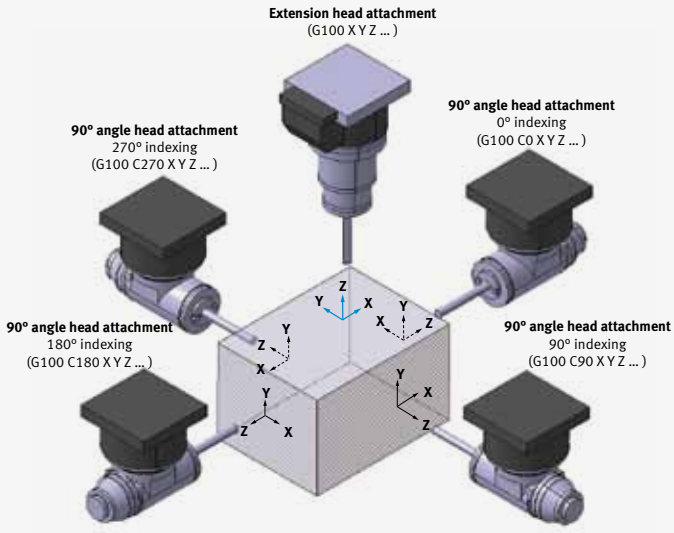


## Easy Setup Guidance option

This function makes it easy to set up the work coordinate system using automatic or semi-automatic measuring probes. In case of automatic probe, by placing the probe close to the setting surface, selecting a shape, and pressing the Cycle Start button, the point is automatically touched and the workpiece coordinate is set up.



## Easy Pattern Cycle

Programming time can be dramatically reduced by creating cutting programs and inputting the major parameters of the cutting pattern cycle required for parts cutting. The function is embedded in the CNC for convenient use in the field. Up to 22 complex pattern cycles including basic 5 patterns are available.




**Various types of hole patterns and milling patterns available**

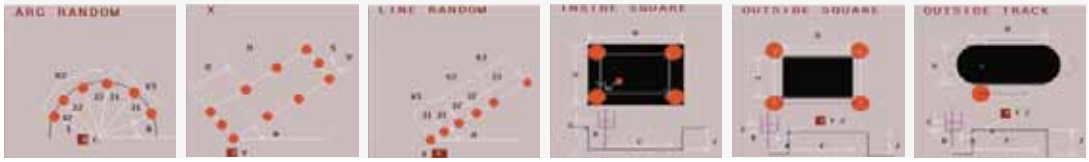

## Work load counter control

If customer selects proper M-Code according to weight of the work piece, the machine can decide itself the best moving pattern of the table. And machining can progress by this decision.

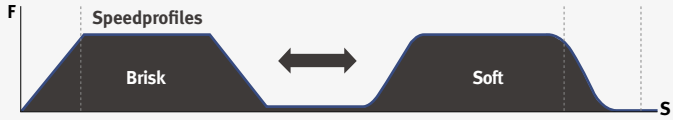


| M-Code | Weight of work piece | DCM 2740 | DCM2750 | DCM 2760 | DCM 3250 | DCM 3260 |
|---|---|---|---|---|---|---|
| M380 A1 | 5 tons(11023.0 lb) or less | • | • | • | • | • |
| M380 A2 | 10 tons(22045.9 lb) or less | • | • | • | • | • |
| M380 A3 | 15 tons(33068.9 lb) or less | • | • | • | • | • |
| M380 A4 | 20 tons(44091.8 lb) or less | • | • | • | • | • |

## Intelligent Machining Control option

• Offers universal functions applicable from die & mold to industrial parts.

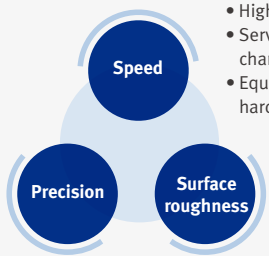


- High speed CPU use
- Servo spindle motor with superb dynamic characteristics
- Equipment structure with outstanding hardness

- High speed servo system
- Variable acceleration control
- Feed forward control

- Powerful block handling capacity
- NANO level control
- CAM S/W linkage capability, NURBS function etc.

## Process monitoring function

In-process monitoring minimizes the risk of damage to the workpiece during cutting

### Cutting load monitoring function option

- Automatic tracking of worn-out or broken tools when abnormal load is checked.
- Data storage function for each workpiece.



### Tool maintenance function option

- An alarm sounds when the tool's life reaches its end.
- Tool management by groups and alternative tools usages are possible



## CNC System FANUC 31i

### Buttons compatible with HEIDENHAIN & SIEMENS NC controller

Buttons are divided into vertically and horizontally by functions.



### File management & editing function similar to that of a PC

- Naming of programs with up to 32 characters paging
- Subprograms with file names
- Program management by folder



## Maintenance Function

**Periodically checking function**

Provides notification of checked items including oil filling for equipment maintenance.




## Improved Operability

**A pendent-arm type operation panel, movable from top beam to the operator, ensures easier operation.**

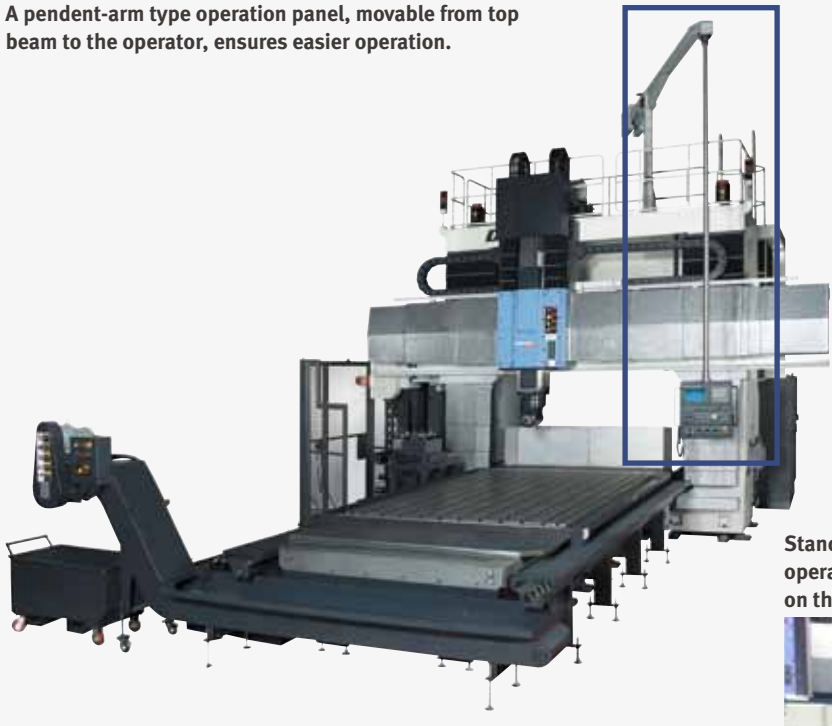

**Stand-type pendent arm operation panel installed on the floor** Option



**Improved user convenience**

- Mono lever jog switch is provided at the bottom of the main operation panel for easier long-axis feeding of large machine tools.
  (Button switches Option)
- The pulse handle and manual handle (portable MPG) enabling easy setup of work pieces for the operator's convenience are provided as a standard feature.



Mono lever jog switches



Manual handle Portable MPG



Manual handle Option Portable 3 MPG



Manual handle Option MPG with LCD display



ATC, APC manual control screen

## Various Optional Equipment

Various options to satisfy the customers' requirements can be selected and applied.

| NO | Division | Description | | DCM series |
|---|---|---|---|---|
| 1 | Electric cabinet light | | | ○ |
| 2 | Electric cabinet air conditioner | | | ○ |
| 3 | High-quality machining (DOOSAN SUPER QUALITY) | DSQ I : AICCII+MACHINING CONDITION SELECTION | | ● |
| 4 | | DSQ II : DSQ I+DATA SERVER (1GB) | | ○ |
| 5 | | DSQ III : DSQ II+HIGH SPEED PROCESSING_600 Block) | | ○ |
| 6 | Tool management | | | ○ |
| 7 | Tool shank | BT50 | | ● |
| 8 | | CAT50 | | ○ |
| 9 | | DIN50 | | ○ |
| 10 | | HSK 63A | | ○ |
| 11 | Tool magazine | 40 tools | | ● |
| 12 | | 60 tools | | ○ |
| 13 | | 90 tools | | ○ |
| 14 | | 120 tools | | ○ |
| 15 | Work load counter control | | | ● |
| 16 | Electric leakage breaker | | | ○ |
| 17 | Electric line filter | | | ○ |
| 18 | Ram spindle | 6000 r/min (Built-in) | 25/22 kW (33.5 / 29.5 Hp)(FANUC) | ● |
| 19 | | 12000 r/min (Built-in) | 30/25 kW(40.2 / 33.5 Hp) (FANUC) | ○ |
| 20 | | 6000 r/min (Gear box) | 22/18.5 kW(29.5 / 24.8 Hp) (FANUC) | ○ |
| 21 | | 4000 r/min (Gear box W/ HIGH TORQUE) | 37/30 kW(49.6 / 40.2 Hp) (FANUC) | ○ |
| 22 | | Spindle lubrication device | | ● |
| 23 | | Step Cooling System | | ● |
| 24 | Linear scale feedback system | X-axis | | ○ |
| 25 | | Y-axis | | ○ |
| 26 | | Z-axis | | ○ |
| 27 | | W-axis | | ○ |
| 28 | Lift-up chip conveyor | HINGED PLATE | | ○ |
| 29 | | MAGNETIC SCRAPER | | ○ |
| 30 | Components for installation | Leveling blocks and anchoring bolts | | ● |
| 31 | Safety ladder and top beam fence | | | ● |
| 32 | Hydraulic power unit | | | ● |
| 33 | Bellows cover for axis | W-axis | | ● |
| 34 | Sliding covers for axes | X/Y/Z axes | | ● |
| 35 | Easy pattern cycle | | | ● |
| 36 | Automatic tool length measurement | TS27R_RENISHAW | | ○ |
| 37 | | NC4_RENISHAW | | ○ |
| 38 | Automatic workpiece measurement | OMP60_RENISHAW | | ○ |
| 39 | | RMP60_RENISHAW | | ○ |
| 40 | Master tool for automatic tool length measurement | CALIBRATION BLOCK | | ○ |
| 41 | Automatic attachment changer (AAC) | LINEAR TYPE (2-ST) | | ● |
| 42 | | ROTARY TYPE (3-ST) | | ○ |
| 43 | | LINEAR SHUTTLE (3-ST) | | ○ |
| 44 | | LINEAR SHUTTLE (4-ST) | | ○ |
| 45 | | LINEAR SHUTTLE (5-ST) | | ○ |
| 46 | | LINEAR SHUTTLE (7-ST) | | ○ |

● Standard ○ Optional X Not applicable

| NO | Division | Description | DCM series |
|---|---|---|---|
| 47 | Auto power on | | ○ |
| 48 | Auto power off | | ● |
| 49 | Automatic Pallet Changer (APC) | SIDE SHUTTLE (2-PALLET) | ○ |
| 50 | Work light | Fluorescent lamps: 2EA | ● |
| 51 | Operator call lamp (Red/Yellow/Green) | | ● |
| 52 | Tool load monitoring | | ○ |
| 53 | Coolant tank | 500L(132.1 galon) | ● |
| 54 | | 1000L(264.2 galon) | ○ |
| 55 | Periodical checking function | | ● |
| 56 | Main operation panel (pendent type) | Up/down pendent | ● |
| 57 | | Stand TYPE | ○ |
| 58 | | GANTRY TYPE | ○ |
| 59 | Max. tool weight | 30KG(66.1 lb) | ● |
| 60 | Max. tool length | 400mm(15.7 inch) | ● |
| 61 | Chip & coolant protective cover | Rear chip protective cover | ● |
| 62 | | CHIP COVER | ○ |
| 63 | | SEMI GUARD | ○ |
| 64 | Coolant | FLOOD 2.2 kW (2.95 Hp) | ● |
| 65 | | FLUSHING | ○ |
| 66 | | Coolant gun | ○ |
| 67 | Test bar | BT50 | ○ |
| 68 | Table T-slot | $24H_8$ ($0.94H_8$) | ● |
| 69 | | $28H_8$ ($1.10H_8$) | ○ |
| 70 | | $32H_8$ ($1.26H_8$) | ○ |
| 71 | Chip bucket | Rotary type (380L) (100.4 galon) | ○ |
| 72 | | Lift type (380L) (100.4 galon) | ○ |
| 73 | High column | +350mm (13.8 inch) | ○ |
| 74 | | +700mm (27.6 inch) | ○ |
| 75 | | +1050mm (41.3 inch) | ○ |
| 76 | W-axis balancing system | | ● |
| 77 | Air | AIR BLOWER | ● |
| 78 | | AIR PURGE | ● |
| 79 | | AIR CURTAIN | ● |
| 80 | | AIR GUN | ○ |
| 81 | | AIR DRYER | ○ |
| 82 | CS control BZ sensor | | ● |
| 83 | Display unit | 10.4" COLOR LCD | ● |
| 84 | | 15" COLOR LCD | ○ |

| NO | Division | Description | DCM series |
|---|---|---|---|
| 85 | F frame head attachment | DUMMY HEAD | ● |
| 86 | | EXTENSION HEAD (L400/4K R/MIN) | ○ |
| 87 | | EXTENSION HEAD (L400/6K R/MIN) | ○ |
| 88 | | EXTENSION HEAD (L600/6K R/MIN) | ○ |
| 89 | | EXTENSION HEAD (L600/10K R/MIN) | ○ |
| 90 | | EXTENSION HEAD (L600/15K R/MIN) | ○ |
| 91 | | 90D ANGLE HEAD (L350/4K R/MIN) | ● |
| 92 | | 90D ANGLE HEAD (L350/4K R/MIN W/TSC) | ○ |
| 93 | | 90D ANGLE HEAD (L350/6K R/MIN) | ○ |
| 94 | | 90D ANGLE HEAD (L350/6K R/MIN W/TSC) | ○ |
| 95 | | UNIVERSAL INDEXING HEAD(L835/2K R/MIN) | ○ |
| 96 | | UNIVERSAL INDEXING HEAD(L835/4K R/MIN) | ○ |
| 97 | F frame 90° head attachment indexing angle | 5˚ | ● |
| 98 | | 2.5˚ | ○ |
| 99 | | 1˚ | ○ |
| 100 | MPG | PORTABLE 1-MPG | ● |
| 101 | | STAND TYPE 3-MPG | ○ |
| 102 | | MPG WITH LCD DISPLAY | ○ |
| 103 | | PORTABLE TYPE 3-MPG | ○ |
| 104 | NC Controller | FANUC 31i-B | ● |
| 105 | | HEIDENHAIN iTNC530 | ○ |
| 106 | | SIEMENS 840D | ○ |
| 107 | Oil skimmer | BELT TYPE | ○ |
| 108 | Pull stud | MAS 403 P50T-1 (45˚) | ● |
| 109 | | MAS 403 P50T-2 (60˚) | ○ |
| 110 | Spot light on ram spindle | | ● |
| 111 | TSC | NONE | ● |
| 112 | | 1.5 kW(2.0 Hp)_2.0 MPa(290.0 psi) | ○ |
| 113 | U frame universal head | UNIVERSAL CONTOURING HEAD (3K R/MIN) | ○ |
| 114 | | UNIVERSAL CONTOURING HEAD (12K R/MIN) | ○ |
| 115 | W-axis cutting feedrate | | ○ |
| 116 | 2-side chip conveyor (in machine to tank) | HINGED PLATE | ○ |
| 117 | | MAGNETIC SCRAPER | ○ |
| 118 | 5-face machining support system | | ● |
| 119 | Additional 5th axis | PACKAGE #1 : ONLY WIRING | ○ |
| 120 | | PACKAGE #2 : HYD. & CONTROL READY | ○ |
| 121 | | PACKAGE #3 : FULL OPT. | ○ |

※ Specifications should be reviewed in detail before contract.

## Automatic Pallet Changer (APC, option)



Faster shipment thanks to standardized modular design

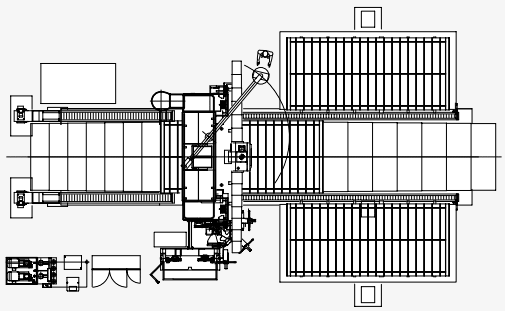

## Automatic Tool Changer (ATC)

One arm performs the changes for both the horizontal and vertical spindle. The next tool to be used, regardless of the spindle location, is brought to the standby position during cutting. The most reliable ATC and magazine with its servo motor minimize downtime.



Horizontal ATC operation with a 90° head attach mounted.

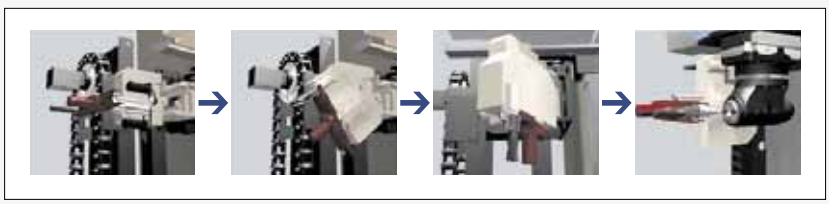



※ Picture-Vertical ATC in operation

| | |
|---|---|
| Max. No. of tools | 40 [ option 60, 90, 120] EA |
| Max. tool diameter | 130 [near pot empty: 250] mm (5.1 [near pot empty: 9.8] inch) |
| Max. tool length | 400mm (15.7 inch) |
| Max. tool weight | 30 kg (66.1 lb) |
| Tool selection type | Fixed address |
| Tool changing time (T-T) | 5.5 s |

## Automatic Tool Length Measurement option

Tool length can be measured in the vertical and horizontal directions. The length of tool set up on the spindle is measured automatically, and the tool offset data of the tool number are entered automatically.



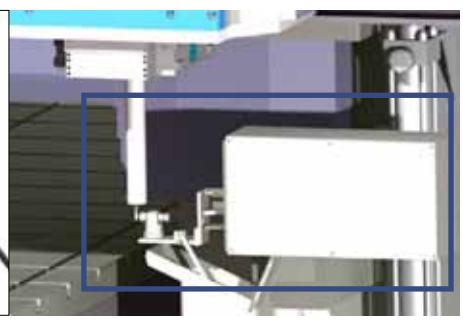

## Chip Cover option

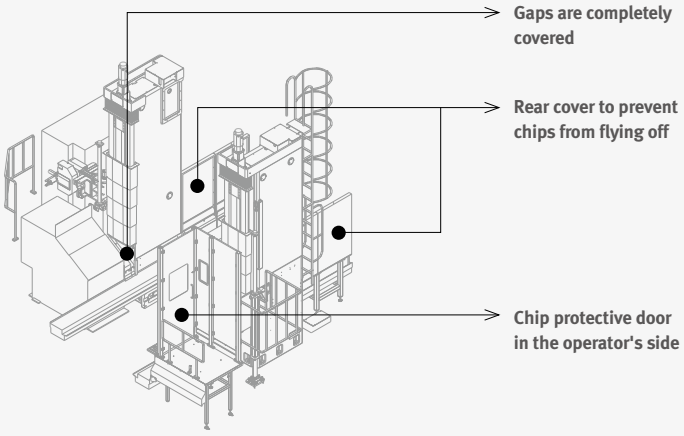




## Semi-guard option

The semi-guard covers the entire cutting area to prevent chips and coolant from flying off during cutting operation.

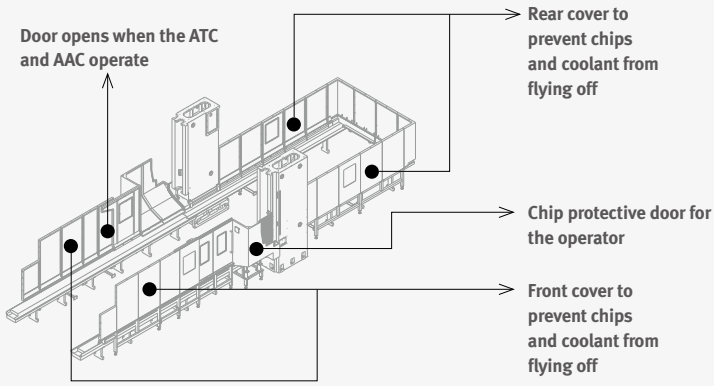




## Chip Conveyor

Optional chip conveyors are available to discharge chips and improved to prevent chips and coolant from falling on the floor.



**Both sides of the table** - chip conveyors option



**Lift-up chip conveyor** option

※ The hinged-plate chip conveyor and the magnetic scraper chip conveyor are optional features.

## Chip Bucket option

### Forklift type

The bottom of the chip bucket has a space into which forks can be inserted to allow transportation by a forklift .

### Rotation type

The chip bucket is fitted with a rotating joint for tilting and emptying the bucket.



# External Dimensions

Top View

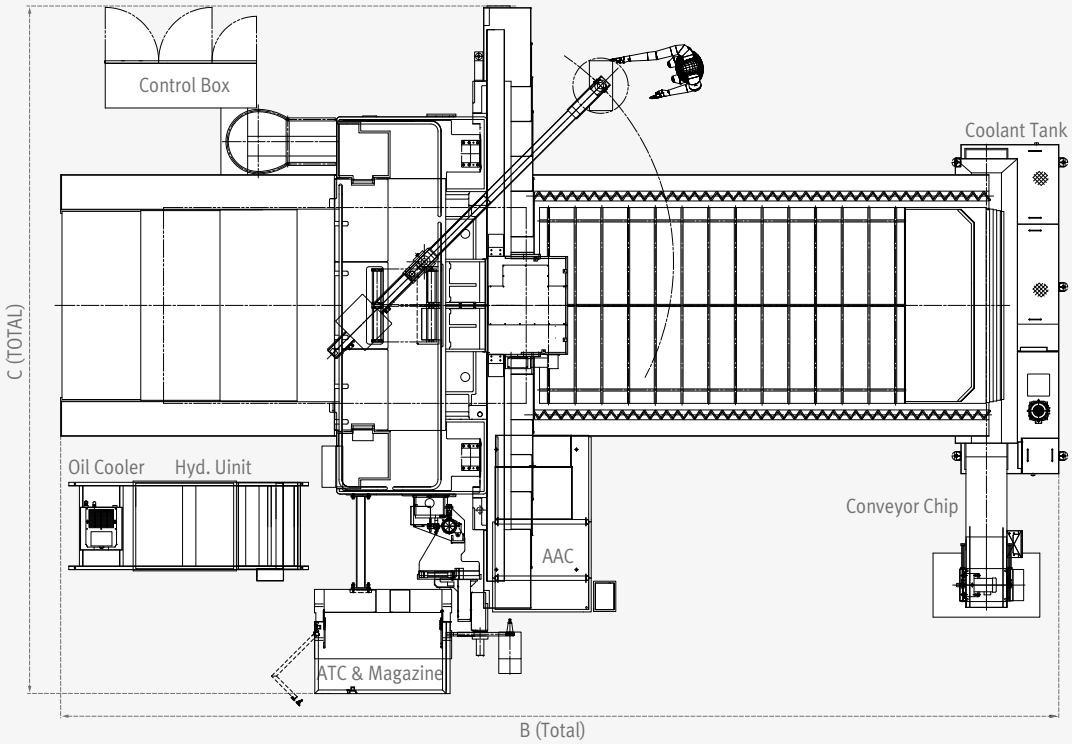


Front View

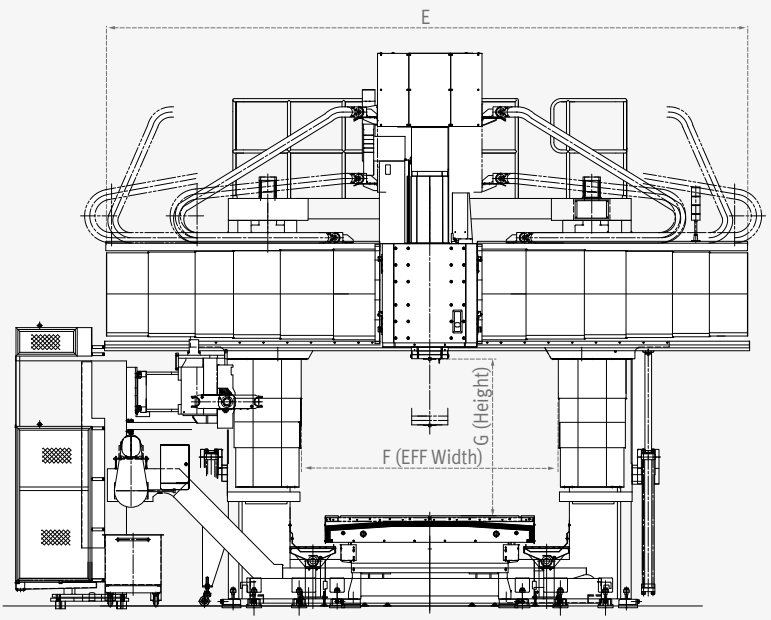

Unit: mm (inch)

Side View

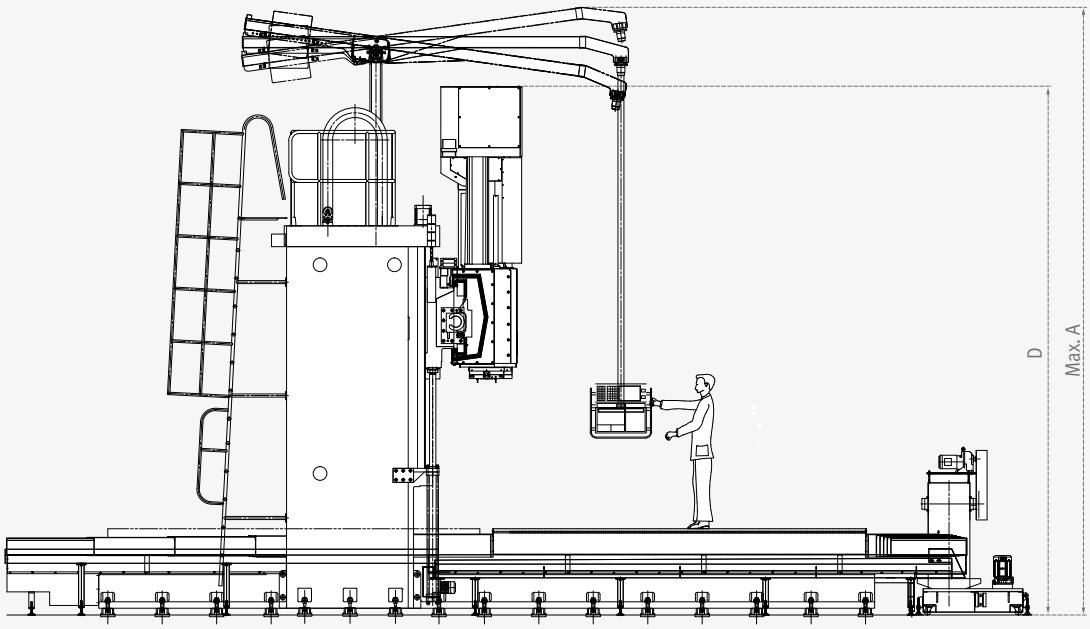


| Model | A | B | C | D | E | F | G |
|---|---|---|---|---|---|---|---|
| DCM 2740 | 6700(263.8) | 11200(440.9) | 7730(304.3) | 5830(229.5) | 6750(265.7) | 2700(106.3) | 1650 [2000 /2350](65.0 [78.7 / 92.5]) |
| DCM 2750 | 6700(263.8) | 13375(526.6) | 7730(304.3) | 5830(229.5) | 6750(265.7) | 2700(106.3) | 1650 [2000 /2350](65.0 [78.7 / 92.5]) |
| DCM 2760 | 6700(263.8) | 15710(618.5) | 7730(304.3) | 5830(229.5) | 6750(265.7) | 2700(106.3) | 1650 [2000 /2350](65.0 [78.7 / 92.5]) |
| DCM 2780 | 6700(263.8) | 19710(776.0) | 7730(304.3) | 5830(229.5) | 6750(265.7) | 2700(106.3) | 1650 [2000 /2350](65.0 [78.7 / 92.5]) |
| DCM 3250 | 6700(263.8) | 13375(526.6) | 8650(340.6) | 5830(229.5) | 7250(285.4) | 3200(126.0) | 1650 [2000 /2350](65.0 [78.7 / 92.5]) |
| DCM 3260 | 6700(263.8) | 15710(618.5) | 8650(340.6) | 5830(229.5) | 7250(285.4) | 3200(126.0) | 1650 [2000 /2350](65.0 [78.7 / 92.5]) |
| DCM 3280 | 6700(263.8) | 19710(776.0) | 8650(340.6) | 5830(229.5) | 7250(285.4) | 3200(126.0) | 1650 [2000 /2350](65.0 [78.7 / 92.5]) |
| DCM 3780 | 7050(277.6) | 19710(776.0) | 9660(380.3) | 6380(251.2) | 8650(340.6) | 3700(145.7) | 1650 [2000 /2350](65.0 [78.7 / 92.5]) |
| DCM 37100 | 7050(277.6) | 24380(959.8) | 9660(380.3) | 6380(251.2) | 8650(340.6) | 3700(145.7) | 1650 [2000 /2350](65.0 [78.7 / 92.5]) |

※ The dimensions above are the standard type for each model.

**Installation precautions**

1. Test for bearing capacity of soil should be taken more than four areas.(In particular, places for bed and column where the loads are concentrated must be tested.)
2. Basically, the bearing capacity of soil should exceed the values determined by Doosan. (Test for bearing capacity of soil should follow Doosan's standards.)
3. Our engineering team may be available even during the foundation work at customer's request.

**Installation & test run**

On-site installation and commissioning will be conducted according to a '5-week' schedule. [Excluding the concreted surface curing period (3rd week)]

※ The installation plan may vary according to the size of the machine, optional devices, and the conditions and environment of the site.

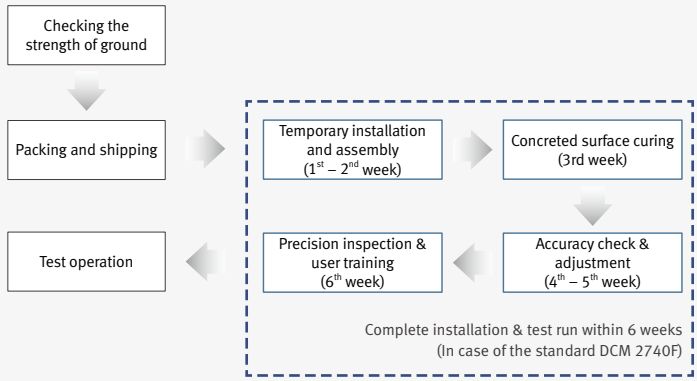

# Tool Dimensions

Unit: mm (inch)

With an adjacent tool

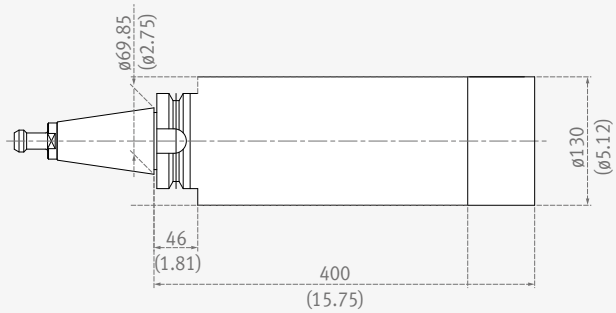


Without adjacent tools

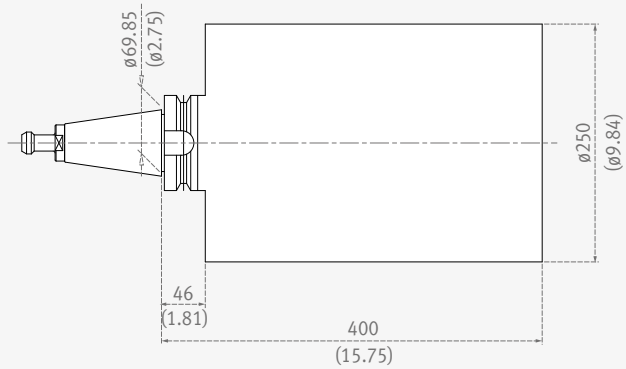


Pull Stud : MAS 403 P50T-1 (45°)

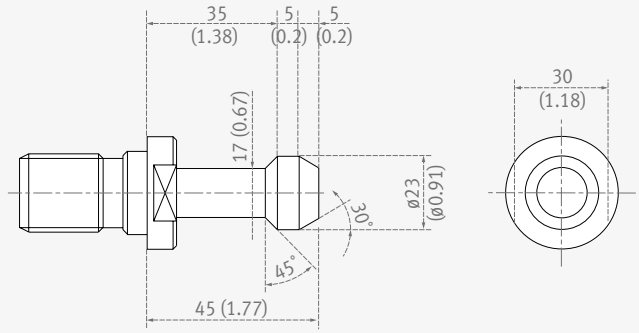


### Maximum tool weight

- Standard: 30 kg × 120 mm
- The center of gravity must be within 120 mm from the gauge line.

### Various tooling applications

- Any type of tooling is applicable.
- Please contact our engineering team if necessary



## Work Area and Table Dimensions

Unit: mm (inch)

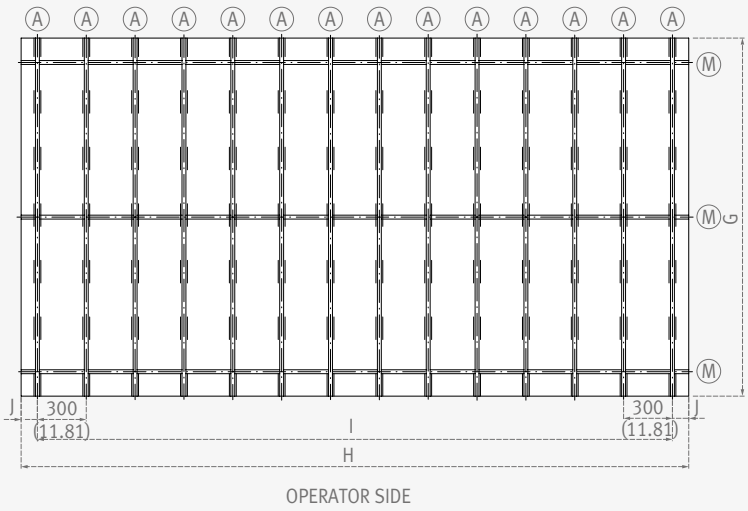


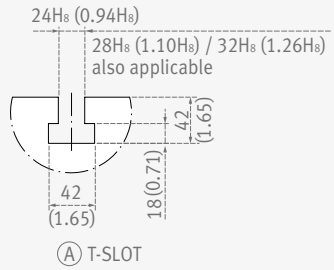


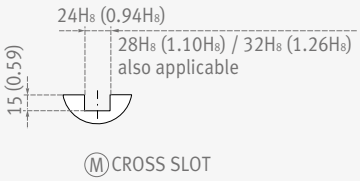


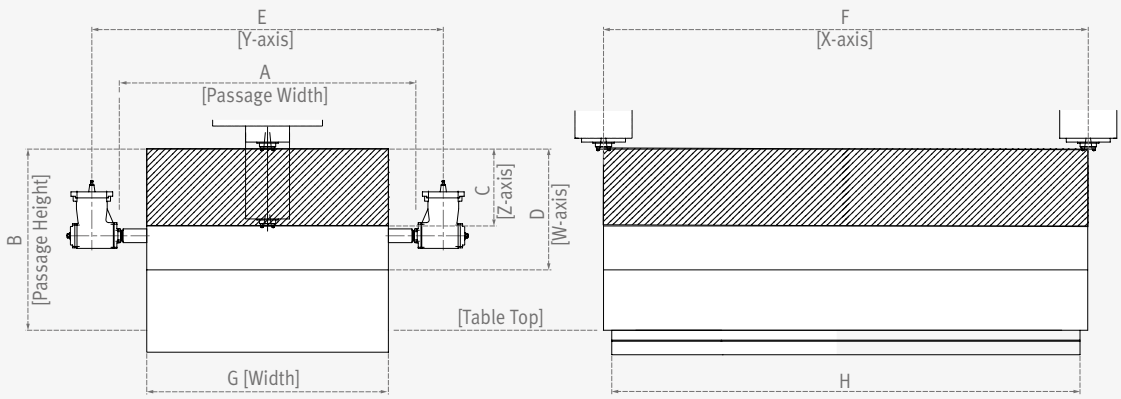


| Model | Table type | A | B | C | D | E | F | G | H | I | J |
|---|---|---|---|---|---|---|---|---|---|---|---|
| DCM 2740 | 22 x 41 (0.9 x 1.6) | 2700 (106.3) | 1650 (65.0) | 700 (27.6) | 1100 (43.3) | 3200 (126.0) | 4250 (167.3) | 2200 (86.6) | 4100 (161.4) | 3900 (153.5) | 100 (3.9) |
| DCM 2750 | 22 x 51 (0.9 x 2.0) | 2700 (106.3) | 1650 (65.0) | 700 (27.6) | 1100 (43.3) | 3200 (126.0) | 5250 (206.7) | 2200 (86.6) | 5100 (200.8) | 4800 (189.0) | 150 (5.9) |
| DCM 2760 | 22 x 61 (0.9 x 2.4) | 2700 (106.3) | 1650 (65.0) | 700 (27.6) | 1100 (43.3) | 3200 (126.0) | 6250 (246.1) | 2200 (86.6) | 6100 (240.2) | 5700 (224.4) | 200 (7.9) |
| DCM 2780 | 22 x 81 (0.9 x 3.2) | 2700 (106.3) | 1650 (65.0) | 700 (27.6) | 1100 (43.3) | 3200 (126.0) | 8250 (324.8) | 2200 (86.6) | 8100 (318.9) | 7800 (307.1) | 150 (5.9) |
| DCM 3250 | 27 x 51 (1.1 x 2.0) | 3200 (126.0) | 1650 (65.0) | 700 (27.6) | 1100 (43.3) | 3700 (145.7) | 5250 (206.7) | 2700 (106.3) | 5100 (200.8) | 4800 (189.0) | 150(5.9) |
| DCM 3260 | 27 x 61 (1.1 x 2.4) | 3200 (126.0) | 1650 (65.0) | 700 (27.6) | 1100 (43.3) | 3700 (145.7) | 6250 (246.1) | 2700 (106.3) | 6100 (240.2) | 5700 (224.4) | 200 (7.9) |
| DCM 3280 | 27 x 81 (1.1 x 3.2) | 3200 (126.0) | 1650 (65.0) | 700 (27.6) | 1100 (43.3) | 3700 (145.7) | 8250 (324.8) | 2700 (106.3) | 8100 (318.9) | 7800 (307.1) | 150 (5.9) |
| DCM 3780 | 32 x 81 (1.3 x 3.2) | 3700 (145.7) | 1650 (65.0) | 700 (27.6) | 1100 (43.3) | 4200 (165.4) | 8250 (324.8) | 3200 (126.0) | 8100 (318.9) | 7800 (307.1) | 150 (5.9) |
| DCM 37100 | 32 x 101 (1.3 x 4.0) | 3700 (145.7) | 1650 (65.0) | 700 (27.6) | 1100 (43.3) | 4200 (165.4) | 10250 (403.5) | 3200 (126.0) | 10100 (397.6) | 9900 (389.8) | 100 (3.9) |

## Machine Specifications

| Item | | Unit | DCM 2740 | DCM 2750 | DCM 2760 | DCM 2780 | DCM 3250 | DCM 3260 | DCM3280 | DCM 3780 | DCM37100 |
|---|---|---|---|---|---|---|---|---|---|---|---|
| Travel | X-axis Travel (Table Longitudinal) | mm (inch) | 4250(167.3) | 5250(206.7) | 6250(246.1) | 8250(324.8) | 5250(206.7) | 6250(246.1) | 8250(324.8) | 8250(324.8) | 10250(403.5) |
| | Y-axis Travel (Spindle Head Cross) | mm (inch) | 3200(126.0) | | | | 3700(145.7) | | | 4200(165.4) | |
| | Z-axis Travel (Ram Vertical) | mm (inch) | 700 {1000}(27.6{39.4}) | | | | | | | 1000(39.4) | |
| | W-axis Travel (Vertical Movement of Crossrail) | mm (inch) | 1100(43.3){1450(57.1): applicable to height of table to spindle nose 2350mm and over} | | | | | | | | |
| | Effective width between columns | mm (inch) | 2700(106.3) | | | | 3200(126.0) | | | 3700(145.7) | |
| | Table to Spindle Nose | mm (inch) | 1650 {2000, 2350, 2700}(65.0{78.7, 92.5, 106.3) | | | | | | | | |
| Feedrate | Rapid Traverse X, Y, Z, W | m/min (ipm) | 16, 16, 10, 3 (629.9, 629.9, 393.7, 118.1) | | | | | | | | |
| | Max. Cutting Feedrate X, Y, Z | mm/min (ipm) | 10000, 10000, 10000 (393.7, 393.7, 10000) | | | | | | | | |
| Table | Table Size (Width x Length) | mm (inch) | 2200 x 4100 (86.6 x 161.4) | 2200 x 5100 (86.6 x 200.8) | 2200 x 6100 (86.6 x 240.2) | 2200 x 8100 (86.6 x 318.9) | 2700 x 5100 (106.3 x 200.8) | 2700 x 6100 (106.3 x 240.2) | 2700 x 8100 (106.3 x 318.9) | 3200 x 8100 (126.0 x 318.9) | 3200 x 10100 (126.0 x 397.6) |
| | Load Capacity | kg (lb) | 18000 (39682.6) | 20000 (44091.8) | 28000 (61728.5) | 36000 (79365.2) | 30000 (66137.7) | 36000 (79365.2) | 40000 (88183.6) | | |
| | T-Slot | mm (inch) | 24H8 {28H8, 32H8} (0.94H8{1.10H8, 1.26H8}) | | | | | | | | |
| Spindle Head | Tool Shank | - | BT 50 | | | | | | | | |
| | Ram Size | mm (inch) | 380 x 380(15.0 x 15.0) | | | | | | | | |
| | Max. Spindle Speed | r/min | Built-in 6000, {Built-in 12000, Gear box 4000, 6000} | | | | | | | | |
| | Spindle Drive Motor (30min. / cont.) | kW (Hp) | 25/22 {Built-in 30/25, Gear box 22/18.5, 37/30} (33.5/29.5 {Built-in 40.2/33.5, Gear box 29.5/24.8, 49.6/40.2}) | | | | | | | | |
| ATC | Tool Storage Capacity | ea | 40 {60, 90, 120} | | | | | | | | |
| | Max.Tool Diameter | mm (inch) | 130 [adjacent pot empty: 250](5.1[adjacent pot empty: 9.8]) | | | | | | | | |
| | Max.Tool Length | mm (inch) | 400(15.7) | | | | | | | | |
| | Max.Tool Weight | kg (lb) | 30 (66.1) | | | | | | | | |
| | Tool Selection Type | | Fixed address | | | | | | | | |
| AAC | Type | | Linear type 2-station {Rotary type 3-station, Linear shuttle type 3/4/5/7 stations} | | | | | | | | |
| Machine Size | Machine Height | mm (inch) | 6700 | | | | | | | | |
| | Floor Space (Machine only) | mm (inch) | 7730 x 11200 (304.3 x 440.9) | 7730 x 13375 (304.3 x 526.6) | 7730 x 15710 (304.3 x 618.5) | 7730 x 19710 (304.3 x 776.0) | 8230 x 13375 (324.0 x 526.6) | 8230 x 15710 (324.0 x 618.5) | 8230 x 19710 (324.0 x 776.0) | 8730 x 19710 (343.7 x 776.0) | 8730 x 959.8 (343.7 x 776.0) |
| | Machine Weight | kg (lb) | 65000 (143298.4) | 68000 (149912.1) | 71000 (156525.9) | 77000 (169753.4) | 82000 (180776.4) | 86000 (189594.7) | 94000 (207231.5) | 112000 (246914.1) | 120000 (264550.8) |

{ } : optional

## NC Unit Specifications

**FANUC 31i**

- Axes control
- Interpolation & feed function
- Spindle & M-code function
- Tool function
- Programming and editing function
- Others (operation, setting & display, etc)
- Frame reference function

● Standard ○ Optional X N/A

| Classification | Item | Spec. | FANUC 31i |
|---|---|---|---|
| Axes control | Controlled axes | 4 ( X,Y,Z,W ) | ● |
| | Additional controlled axes | 6 axes in total | ○ |
| | Simultaneously controlled axes | Positioning(G00)/Linear interpolation(G01) : 3 axes<br>Circular interpolation(G02, G03) : 2 axes | ● |
| | Backlash compensation | | ● |
| | Emergency stop / overtravel | | ● |
| | HRV control | | ● |
| | Least command increment | 0.001 mm / 0.0001" | ● |
| | Least input increment | 0.001 mm / 0.0001" | ● |
| | Machine lock | all axes / Z-W axis | ● |
| | Mirror image | Reverse axis movement (setting screen and M - function) | ● |
| | Stored pitch error compensation | Pitch error offset compensation for each axis | ● |
| | Interpolation type pitch error compensation | | ○ |
| | Stored stroke check1 | Overtraval controlled by software | ● |
| | Absolute pulse coder | | ● |
| | Position switch | | ● |
| Interpolation & feed function | 2nd reference point return | G30 | ● |
| | 3rd/4th reference return | G30P3/P4 | ● |
| | Circular interpolation | G02, G03 | ● |
| | Cylinderical interpolation | G07.1 | ○ |
| | Linear interpolation | G01 | ● |
| | Helical interpolation | | ● |
| | Bell-type acceleration/deceleration before look ahead interpolation | | ○ |
| | Polar coordinate interpolation | G12.1 / G13.1 | ○ |
| | Exponential interpolation | | ○ |
| | Involute interpolation | | ○ |

● Standard ○ Optional X N/A

| Classification | Item | Spec. | FANUC 31i |
|---|---|---|---|
| Interpolation & feed function | Smooth backlash compensation | | ● |
| | Dwell | G04 | ● |
| | Exact stop check | G09, G61 (mode) | ● |
| | Feed per minute | mm / min | ● |
| | Feedrate override | 0 - 200 % (10% unit) | ● |
| | Jog override | 0 - 5000mm/min | ● |
| | Automatic corner override | G62 | ○ |
| | Automatic corner deceleration | | ● |
| | Cutting feedrate clamp | | ● |
| | Rapid traverse bell-shaped acceleration/ deceleration | | ● |
| | 3-dimensional manual feed | | ● |
| | Manual handle feed | 1 unit | ● |
| | Manual handle feed 2/3 unit | Max. 3unit | ○ |
| | Manual handle feed rate | x1, x10, x100 (per pulse) | ● |
| | Manual handle interruption | | ○ |
| | Manual handle retrace | | ○ |
| | Override cancel | M48 / M49 | ● |
| | Positioning | G00 | ● |
| | Rapid traverse override | F0 (fine feed), 25 / 50 / 100 % | ● |
| | Reference point return | G27, G28, G29 | ● |
| | Skip function | G31 | ● |
| | AICC II | 200 BLOCK | ● |
| | High-speed processing | 600 BLOCK | ○ |
| | Look-ahead blocks expansion | 1000 BLOCK | ○ |
| | DSQ I | AICC II (200block) + Machining condition selection function | ● |
| | DSQ II | AICC II (200block) + Machining condition selection function + Data server(1GB) | ○ |
| | DSQ III | AICC II with high speed processing (600block) + Machining condition selection function + Data server(1GB) | ○ |
| Spindle & M-code function | M- code function | | ● |
| | Spindle orientation | M 3 digits | ● |
| | Spindle speed command | S5 digits | ● |
| | Spindle speed override | 10 - 150 (10% increments) | ● |
| | Retraction for rigid tapping | | ● |
| | Rigid tapping | G84, G74 | ● |
| Tool function | Tool nose radius compensation (Cutter compensation C) | G40, G41, G42 | ● |
| | Number of tool offsets | 200 ea | ● |
| | Number of tool offsets | 400 ea | ○ |
| | Number of tool offsets | 499 / 999 / 2000 ea | ○ |
| | Tool length compensation | G43, G44, G49 | ● |
| | Tool life management | | ● |
| | Addition of tool pairs for tool life management | | ○ |
| | Tool number command | T3 digits | ● |
| | Tool offset memory C | Geometry / Wear and Length / Radius offset memory | ● |
| | Tool offset | G45 - G48 | ○ |
| Programming and editing function | Absolute / Incremental programming | G90 / G91 | ● |
| | Automatic Coordinate system setting | | ● |
| | Background editing | | ● |
| | Canned cycle | G73, G74, G76, G80 - G89, G99 | ● |
| | Circular interpolation by radius programming | | ● |
| | Custom macro | | ● |
| | Addition of custom macro common variables | #100 - #199, #500 - #999 | ● |
| | Macro executor | | ● |
| | Decimal point input | | ● |
| | Extended part program editing | | ● |
| | Part program storage | 1MB(2,560m) | ● |
| | Part program storage | 2MB(5,120m) | ○ |
| | Part program storage | 4MB(1,0240m) | ○ |
| | Part program storage | 8MB(2,0480m) | ○ |
| | Inch/metric conversion | G20 / G21 | ● |
| | Label skip | | ● |
| | Maximum commandable value | ±99999.999mm (±9999.9999 inch) | ● |
| | No. of Registered programs | 1000 ea | ● |
| | No. of Registered programs | 4000 ea | ○ |
| | Optional block skip | 9 BLOCK | ○ |
| | Optional stop | M01 | ● |
| | Program file name | 32 characters | ● |

| Classification | Item | Spec. | FANUC 31i |
|---|---|---|---|
| Programming and editing function | Program number | O4-digits | ● |
| | Sequence number | N 8-digit | ● |
| | Playback function | | ○ |
| | Program protect | | ● |
| | Program stop / end | M00 / M02, M30 | ● |
| | Programmable data input | Tool offset and work offset are entered by G10, G11 | ● |
| | Sub program | Up to 10 nesting | ● |
| | Tape code | ISO / EIA Automatic discrimination | ● |
| | Thread cutting | | ● |
| | Program restart | | ● |
| | Workpiece coordinate system | G52 - G59 | ● |
| | Addition of workpiece coordinate system | G54.1 P1 - 48 (48 pairs) | ● |
| | Addition of workpiece coordinate system | G54.1 P1 - 300 (300 pairs) | ○ |
| | Coordinate system rotation G68, G69 | | ● |
| | Extended part program editing | | ● |
| | Optional angle chamfering . Corner R | | ● |
| Others (Operation, setting & Display, etc) | Alarm display | | ● |
| | Alarm history display | | ● |
| | Actual cutting speed display | | ● |
| | Clock function | | ● |
| | Coordinate system rotation | G68,G69 | ● |
| | Cycle start / Feed hold | | ● |
| | Display of PMC alarm message | Message display when PMC alarm occurred | ● |
| | Dry run | | ● |
| | Embeded Ethernet | | ● |
| | Graphic display | Tool path drawing | ● |
| | Help function | | ● |
| | Loadmeter display | | ● |
| | MDI / DISPLAY unit | 10.4" Color LCD, Keyboard for data input, soft-keys | ● |
| | Memory card interface | | ● |
| | I/O interface | RS - 232C | ● |
| | USB memory interface | Only Data Read & Write | ● |
| | Operation functions | Tape / Memory / MDI / Manual | ● |
| | Operation history display | | ● |
| | DNC operation with memory card | | ● |
| | Optional angle chamfering / corner R | | ● |
| | Run hour and part number display | | ● |
| | Search function | Sequence NO. / Program NO. | ● |
| | Self - diagnostic function | | ● |
| | Servo setting screen | | ● |
| | Single block | | ● |
| | External data input | | ● |
| | Stored stroke check 2 | | ● |
| | Multi language display | | ● |
| | 3-dimensional coordinate system conversion | G68 | ● |
| | Cs contouring control | | ● |
| | Reader/Puncher interface (for 2ch) | Note1) | ○ |
| | Multi spindle control | Note2) | ○ |
| | Extended Spindle orientation | Note2) | ○ |
| | Extended spindle output switching function | Note2) | ○ |
| | Chopping function | G81.1 | ○ |
| | High speed skip function | | ○ |
| | Polar coordinate command | G15 / G16 | ○ |
| | Programmable mirror image | G50.1 / G51.1 | ○ |
| | Scaling | G50, G51 | ○ |
| | Single direction positioning | G60 | ○ |
| | Fast Data server with1GB PCMCIA card | | ○ |
| | Fast Ethernet | | ○ |
| | 3-dimensional tool compensation | | ○ |
| | Tape format for FS15 | | ○ |
| | Figure copying | G72.1, G72.2 | ○ |
| | Machining time stamp function | | ○ |
| | EZ Guide I with 10.4" Color TFT | - Doosan infracore Conversational Programming Solution<br>- When the EZ Guide i is used, the Dynamic graphic display cannot application | ○ |
| | Dynamic graphic display (with 10.4" Color TFT LCD) | - Machining profile drawing.<br>- When the EZ Guide i is used, the Dynamic graphic display cannot application | ○ |
| | Nano smoothing | | ○ |
| | 3D Manual handle interruption | | ○ |

# Responding to Customers Anytime, Anywhere

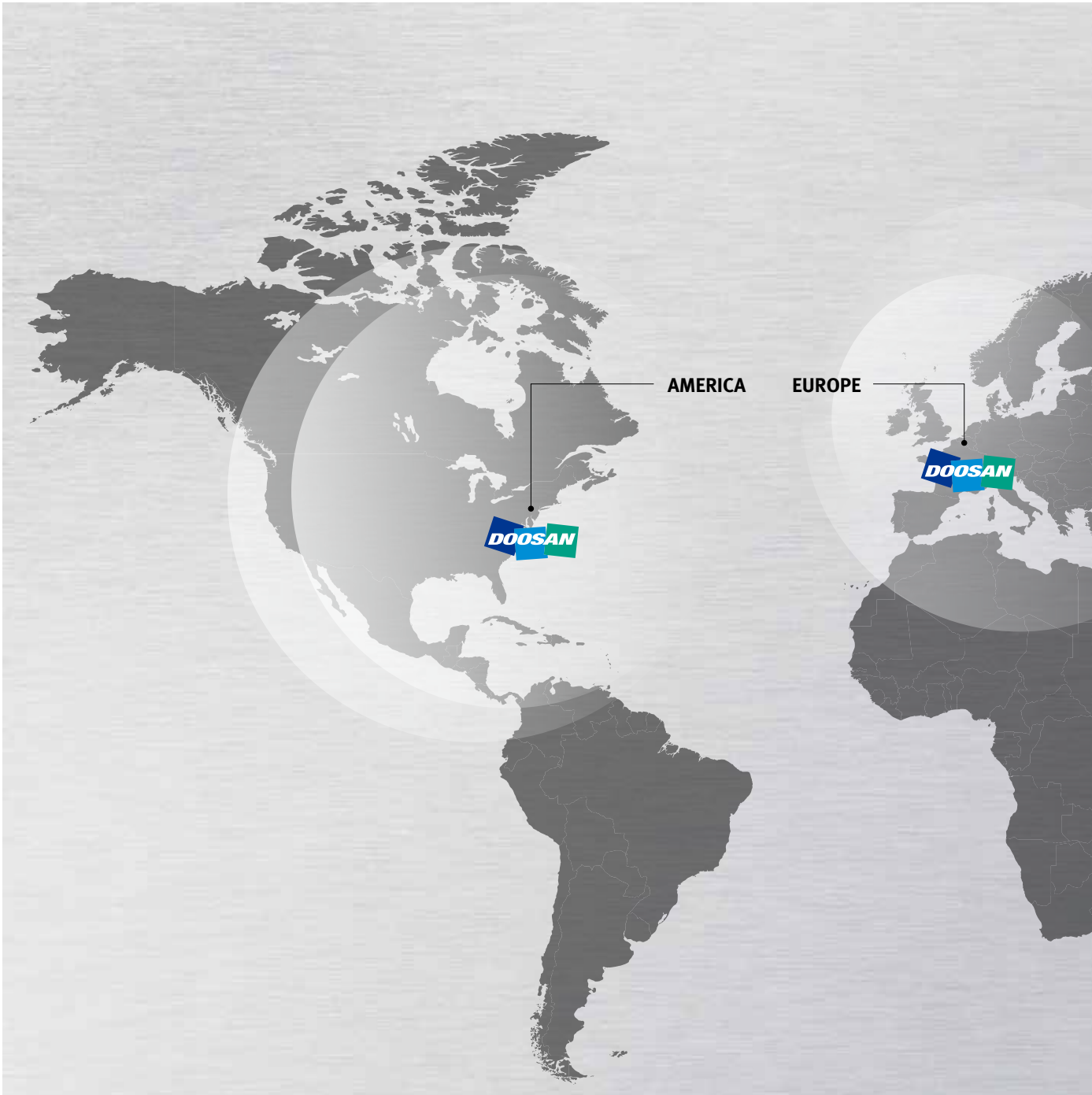


## Global Service Support Network

| Corporations | Dealer Networks | Technical Centers | Factories |
|---|---|---|---|
| 5 | 122 | 18 | 3 |

Technical Center: Sales Support, Service Support, Parts Support

## Doosan Machine Tools' Global Network, Responding to Customer's Needs nearby, Anytime, Anywhere

Doosan machine tools provides a system-based professional support service before and after the machine tool sale by responding quickly and efficiently to customers' demands. By supplying spare parts, product training, field service and technical support, we can provide top class support to our customers around the world.




### Domestic Service Support Network

| Integrated Support Centers | Sales Branch Offices | Post-Sales Service Centers | Designated Repair Service Centers |
|---|---|---|---|
| 2 | 7 | 6 | 31 |

## Customer Support Service

We help customers to achieve success by providing a variety of professional services from pre-sales consultancy to post-sales support.

### Supplying Parts

- Supplying a wide range of original Doosan spare parts
- Parts repair service

### Field Services

- On site service
- Machine installation and testing
- Scheduled preventive maintenance
- Machine repair

### Technical Support

- Supports machining methods and technology
- Responds to technical queries
- Provides technical consultancy

### Training

- Programming / machine setup and operation
- Electrical and mechanical maintenance
- Applications engineering

**Product Specifications**

## DCM series

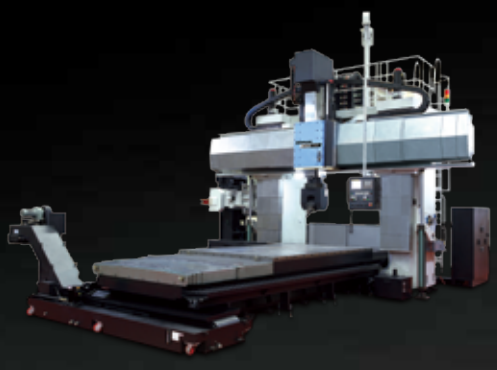

| Description | Effective width between columns mm (inch) | Table size mm (inch) | X/Y/Z/W axes travel mm (inch) | Spindle speed (r/min) |
|---|---|---|---|---|
| DCM 2740 | 2700(106.3) | 2200 x 4100 (86.6 x 161.4) | 4250 / 3200 / 700 / 1100 (167.3 / 126.0 / 27.6 / 43.3) | [Standard/high-speed built-in spindle]<br>Standard 6000<br>High-speed 12000 option<br><br>[Heavy-duty gear-driven spindle]<br>Heavy-duty Ⅰ 6000 option<br>Heavy-duty Ⅱ 4000 option |
| DCM 2750 | | 2200 x 5100 (86.6 x 200.8) | 5250 / 3200 / 700 / 1100 (206.7 / 126.0 / 27.6 / 43.3) | |
| DCM 2760 | | 2200 x 6100 (86.6 x 240.2) | 6250 / 3200 / 700 / 1100 (246.1 / 126.0 / 27.6 / 43.3) | |
| DCM 2780 | | 2200 x 8100 (86.6 x 318.9) | 8250 / 3200 / 700 / 1100 (324.8 / 126.0 / 27.6 / 43.3) | |
| DCM 3250 | 3200(126.0) | 2700 x 5100 (106.3 x 200.8) | 5250 / 3700 / 700 / 1100 (206.7 / 126.0 / 27.6 / 43.3) | |
| DCM 3260 | | 2700 x 6100 (106.3 x 240.2) | 6250 / 3700 / 700 / 1100 (246.1 / 126.0 / 27.6 / 43.3) | |
| DCM 3280 | | 2700 x 8100 (106.3 x 318.9) | 8250 / 3700 / 700 / 1100 (324.8 / 126.0 / 27.6 / 43.3) | |
| DCM 3780 | 3700(145.7) | 3200 x 8100 (126.0 x 318.9) | 8250 / 4200 / 1000 / 1100 (324.8 / 165.4 / 39.4 / 43.3) | |
| DCM 37100 | | 3200 x 10100 (126.0 x 397.6) | 10250 / 4200 / 1000 / 1100 (403.5 / 165.4 / 39.4 / 43.3) | |

# Doosan Machine Tools

http://www.doosanmachinetools.com
www.facebook.com/doosanmachinetools

## *Optimal Solutions for the Future*


**Head Office**
Yeonkang Bldg., 6th FL., 270, Yeonji-dong, Jongno-gu, Seoul, Korea
**Tel** +82-2-3670-5345 / 5362
**Fax** +82-2-3670-5382

**Doosan Machine Tools China**
Room 101,201,301, Building 39 Xinzhuan Highway No.258 Songjiang District,China Shanghai(201612)
**Tel** +86 21-5445-1155
**Fax** +86 21-6405-1472

**Doosan Machine Tools Japan**
#2412, Mita Kokusai Bldg. 1-4-28 Mita, Minato-ku, Tokyo 108-0073, Japan
**Tel** +81 3 5730 9013
**Fax** +81 3 5730 9016

**Doosan Machine Tools America**
19A Chapin Rd., Pine Brook, NJ 07058, U.S.A.
**Tel** +1-973-618-2500
**Fax** +1-973-618-2501

**Doosan Machine Tools Europe**
Emdener Strasse 24, D-41540 Dormagen, Germany
**Tel** +49-2133-5067-100
**Fax** +49-2133-5067-001

**Doosan Machine Tools India**
106 / 10-11-12, Amruthahalli, Byatarayanapura, Bellary road, Bangalore-560 092, India
**Tel** +91-80-4266-0122 / 121 / 100


* For more details, please contact Doosan Machine Tools.
* The specifications and information above-mentioned may be changed without prior notice.
* Doosan Machine Tools Co., Ltd. is a subsidiary of MBK Partners, a Korean private equity firm. The trademark DOOSAN is used under a licensing agreement with Doosan Corporation, the registered trademark holder.