Elbow & Union
SD Conduit Body Series

❖ Type of Explosion-proof
Increase Safety (Ex e II)

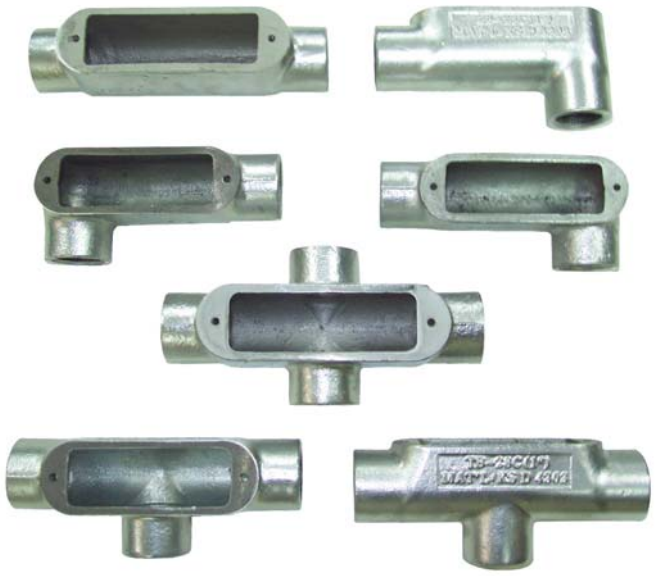

❖ Application

SD Series Conduit bodies are installed in;

- act as pull outlet bodies for conductors being installed.
- provide openings for making splices and taps in conductors.
- act as mounting outlets for lighting fixtures and wiring devices.
- connect conduit sections.
- provide taps for branch conduit runs.
- make 90° bends in conduit runs.
- provide for access to conductors for maintenance and future system changes.
- where ignitable concentrations of flammable gases, vapors or liquids can exist some of the time under normal operation conditions.

❖ Features

- 2 product sizes (Large, Middle).
- 7 shapes (C, LB, LL, LR, T, TB, X).
- 10 conduit sizes (1/2, 3/4, 1, 1-1/4, 1-1/2, 2, 2-1/2, 3, 3-1/2, 4").
- SD-M series conduit bodies approach conduit in size for neat, compact installations.
- SD-L series conduit bodies provide more room for heavier conductors.
- SD-L series conduit bodies are standard products.
- Most of SD-L series conduit bodies get UL Certification.
- Conduit hubs have tapered threads and feature integral bushings for protection of wire insulation.
- Smooth integral wire bushings protects cable form damage when wires are pulled through opening.
- Solid gaskets or Open gaskets

❖ Standard Materials

- Body : Cast Iron
- Cover : Cast Iron
- Gasket : Neoprene

❖ Standard Finish

- Hot Dip. Galvanized with stove enamelled silver white
- If you want another color, contact us please.

❖ Option

- NPT Thread : suffix. NPT

❖ Compliance

- IEC 60079-0, 7
- ANSI/UL 886
- UL Listed File No. E142233

❖ Certification

- Certified by UL (Underwriters Laboratories Inc.), KOSHA (Korea Occupational Safety & Health Agency), KGS (Korea Gas Safety Corporation), and the others.

Copyright by NAMBUK Electric Co., LTD. 2004

❖ C Type



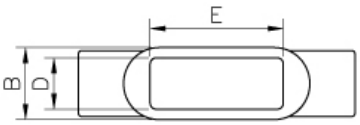

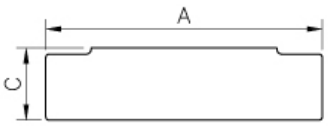

Hub Size		1/2" 16C	3/4" 22C	1" 28C	1-1/4" 36C	1-1/2" 42C	2" 54C	2-1/2" 70C	3" 82C	3-1/2" 92C	4" 104C
Cat. No.		SDC 510M	SDC 511M	SDC 512M	SDC 513M	SDC 514M	SDC 515M	SDC 516M	SDC 517M	SDC 518M	SDC 519M
Dimension	a	137	152	178	196	210	235	302	302	360	360
	b	35	40	45	58	64	75	108	108	134	134
	c	35	42	48	59	66	80	94	113	127	140
	d	25	29	33	45	51	61	90	90	114	114
	e	66	82	98	105	116	136	171	171	200	200
Cat. No.		SDC 510L	SDC 511L	SDC 512L	SDC 513L	SDC 514L	SDC 515L	SDC 516L	SDC 517L	-	-
Dimension	a	145	169	201	218	252	306	396	396	-	-
	b	34	45	48	58	69	95	124	124	-	-
	c	37	53.5	58	66	74	90	113	122	-	-
	d	25	32	35	44	52	76	110	110	-	-
	e	80	96	110	127	157	210	276	276	-	-

❖ LB Type



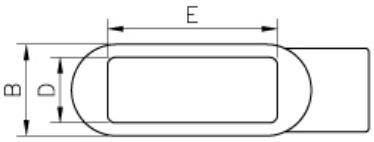

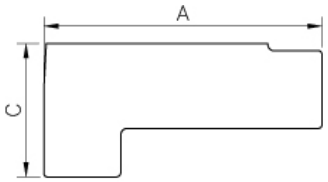

Hub Size		1/2" 16C	3/4" 22C	1" 28C	1-1/4" 36C	1-1/2" 42C	2" 54C	2-1/2" 70C	3" 82C	3-1/2" 92C	4" 104C
Cat. No.		SDLB 520M	SDLB 521M	SDLB 522M	SDLB 523M	SDLB 524M	SDLB 525M	SDLB 526M	SDLB 527M	SDLB 528M	SDLB 529M
Dimension	a	115.5	132	155	172	184.5	208.5	267	267	322	322
	b	35	40	45	58	64	75	108	108	134	134
	c	55	62	71.5	84.5	93.5	110.5	130	149	167	180
	d	25	29	33	45	51	61	90	90	114	114
	e	66	82	98	105	116	136	171	171	200	200
Cat. No.		SDLB 520L	SDLB 521L	SDLB 522L	SDLB 523L	SDLB 524L	SDLB 525L	SDLB 526L	SDLB 527L	SDLB 528L	SDLB 529L
Dimension	a	130	150	175.5	195	225	283	356	356	428	428
	b	37	45	48	58	68	96	130	130	162	162
	c	55	69	82	85.5	102	130	155.5	165	192	198.5
	d	25	32	35	44	52	76	110	110	140	140
	e	80	96	110	127	153	206	276	276	330	330

❖ LL Type



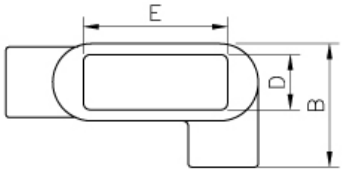

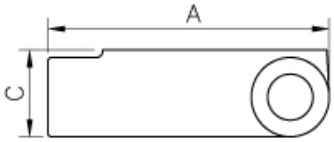

Hub Size		1/2" 16C	3/4" 22C	1" 28C	1-1/4" 36C	1-1/2" 42C	2" 54C	2-1/2" 70C	3" 82C	3-1/2" 92C	4" 104C
Cat. No.		SDLL 520M	SDLL 521M	SDLL 522M	SDLL 523M	SDLL 524M	SDLL 525M	SDLL 526M	SDLL 527M	SDLL 528M	SDLL 529M
Dimension	a	115.5	132	155	172	184.5	208.5	267	267	322	322
	b	56	61	70.5	85.5	91.5	105.5	146	146	175	175
	c	35	42	48	59	66	80	94	113	127	140
	d	25	29	33	45	51	61	90	90	114	114
	e	66	82	98	105	116	136	171	171	200	200
Cat. No.		SDLL 520L	SDLL 521L	SDLL 522L	SDLL 523L	SDLL 524L	SDLL 525L	SDLL 526L	SDLL 527L	-	-
Dimension	a	130	150	176	194	226	281	356	356	-	-
	b	56	63	74	83.5	100	130	173	173	-	-
	c	36	51	57	60	70	90	113	122	-	-
	d	24	32	35	44	52	76	110	110	-	-
	e	80	96	110	127	157	210	276	276	-	-

Copyright by NAMBUK Electric Co., LTD. 2004

❖ LR Type

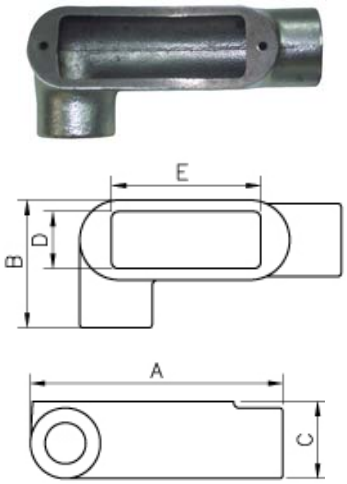

Hub Size		1/2" 16C	3/4" 22C	1" 28C	1-1/4" 36C	1-1/2" 42C	2" 54C	2-1/2" 70C	3" 82C	3-1/2" 92C	4" 104C
Cat. No.		SDLR 540M	SDLR 541M	SDLR 542M	SDLR 543M	SDLR 544M	SDLR 545M	SDLR 546M	SDLR 547M	SDLR 548M	SDLR 549M
Dimension	a	115.5	132	155	172	184.5	208.5	267	267	322	322
	b	56	61	70.5	85.5	91.5	105.5	146	146	175	175
	c	35	42	48	59	66	80	94	113	127	140
	d	25	29	33	45	51	61	90	90	114	114
	e	66	82	98	105	116	136	171	171	200	200
Cat. No.		SDLR 540L	SDLR 541L	SDLR 542L	SDLR 543L	SDLR 544L	SDLR 545L	SDLR 546L	SDLR 547L	-	-
Dimension	a	130	150	176	194	226	281	356	356	-	-
	b	56	63	74	83.5	100	130	173	173	-	-
	c	36	51	57	60	70	90	113	122	-	-
	d	24	32	35	44	52	76	110	110	-	-
	e	80	96	110	127	157	210	276	276	-	-

❖ T Type

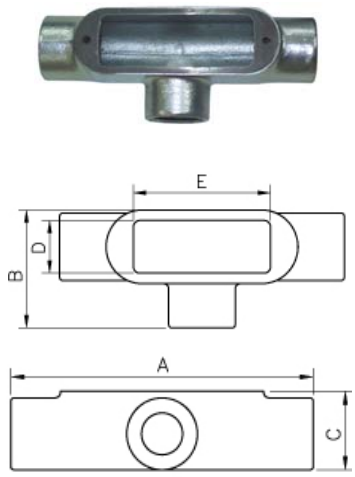

Hub Size		1/2" 16C	3/4" 22C	1" 28C	1-1/4" 36C	1-1/2" 42C	2" 54C	2-1/2" 70C	3" 82C	3-1/2" 92C	4" 104C
Cat. No.		SDT 550M	SDT 551M	SDT 552M	SDT 553M	SDT 554M	SDT 555M	SDT 556M	SDT 557M	SDT 558M	SDT 559M
Dimension	a	137	152	178	196	210	235	302	302	360	360
	b	56	61	70.5	85.5	91.5	105.5	146	146	175	175
	c	35	42	48	59	66	80	94	113	127	139.5
	d	25	29	33	45	51	61	90	90	114	114
	e	66	82	98	105	116	136	171	171	200	200
Cat. No.		SDT 550L	SDT 551L	SDT 552L	SDT 553L	SDT 554L	SDT 555L	SDT 556L	SDT 557L	-	-
Dimension	a	145	165	200	218	250	306	396	396	-	-
	b	56	65	75	83.5	100	130	170	170	-	-
	c	44	50	57	65	70	90	113	122	-	-
	d	25	32	35	44	52	76	110	110	-	-
	e	80	96	109	127	157	210	276	276	-	-

❖ TB Type

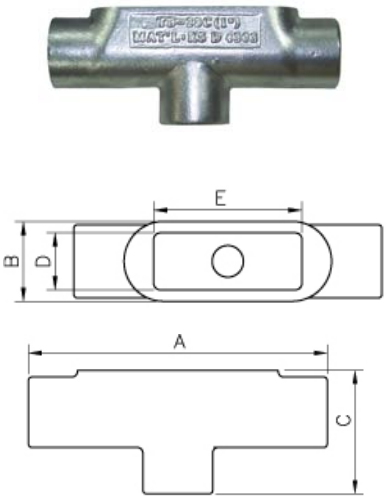

Hub Size		1/2" 16C	3/4" 22C	1" 28C	1-1/4" 36C	1-1/2" 42C	2" 54C	2-1/2" 70C	3" 82C	3-1/2" 92C	4" 104C
Cat. No.		SDTB 560M	SDTB 561M	SDTB 562M	SDTB 563M	SDTB 564M	SDTB 565M	SDTB 566M	SDTB 567M	SDTB 568M	SDTB 569M
Dimension	a	137	152	178	196	210	235	302	302	360	360
	b	35	40	45	58	64	75	108	108	133	133
	c	55	62	71.5	84.5	93.5	110.5	130	149	167	180
	d	25	29	33	45	51	61	90	90	114	114
	e	66	82	98	105	116	136	171	171	200	200
Cat. No.		SDTB 560L	SDTB 561L	SDTB 562L	SDTB 563L	SDTB 564L	SDTB 565L	SDTB 566L	SDTB 567L	SDTB 568L	SDTB 569L
Dimension	a		166	200	218	249	306	-	-	-	-
	b		45	48	58	68	95	-	-	-	-
	c		69	82	91.5	100	123	-	-	-	-
	d		32	35	44	52	76	-	-	-	-
	e		96	110	127	157	210	-	-	-	-

Copyright by NAMBUK Electric Co., LTD. 2004

❖ X Type

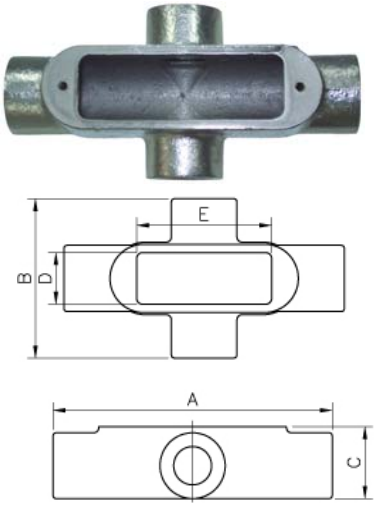

Hub Size		1/2" 16C	3/4" 22C	1" 28C	1-1/4" 36C	1-1/2" 42C	2" 54C	2-1/2" 70C	3" 82C	3-1/2" 92C	4" 104C
Cat. No.		SDX 570M	SDX 571M	SDX 572M	SDX 573M	SDX 574M	SDX 575M	SDX 576M	SDX 577M	SDX 578M	SDX 579M
Dimension	a	137	152	178	196	210	235	302	302	360	360
	b	77	82	96	113	119	136	184	184	217	217
	c	35	42	48	59	66	80	94	113	127	139.5
	d	25	29	33	45	51	61	90	90	114	114
	e	66	82	98	105	116	136	171	171	200	200
Cat. No.		SDX 570L	SDX 571L	SDX 572L	SDX 573L	SDX 574L	SDX 575L	-	-	-	-
Dimension	a		166	199	218	249	306	-	-	-	-
	b		81	98	109	132	165	-	-	-	-
	c		51	57	66	70	90	-	-	-	-
	d		32	35	44	52	76	-	-	-	-
	e		96	110	127	157	210	-	-	-	-

Copyright by NAMBUK Electric Co., LTD. 2004