1-3 실내 온도 감지기
GST Series



적용 | Application |

"GST" Room Temperature Sensor is intended for heating, ventilating, air conditioning and other industrial installations for control and receiving reference signals from any space or room. Compact design of the detector is idealistic for maintenance or replacement without any special tools. Units contain either a high quality platinum or thermistor (NTC) sensing element suitable for use in the range −10 ~ +70℃.

기술 사양 | Technical Data |

모델	검출 소자	온도 범위	정밀도	결선	적용
(RTD.. 소자)					
GST-100	Pt100Ω	−10 ~ 70℃	±0.3℃ (at 0℃)	3wire / 1.0㎟	
GST-1000	Pt1000Ω	−10 ~ 70℃	±0.3℃ (at 0℃)	3wire / 1.0㎟	
(Thermistor.. NTC 소자)					
GST-N10K-AN	NTC10000Ω	−10 ~ 70℃	±0.2℃ (at 25℃)	2wire / 1.0㎟	ACI/AN, ANDOVER, BA/10K-3 PRECON-3 (Model.3)
GST-N10K-CP	NTC10000Ω	−10 ~ 70℃	±0.2℃ (at 25℃)	2wire / 1.0㎟	ACI/CP, BA/10K-2 PRECON-2 (Model.24)
GST-N5K	NTC5000Ω	−10 ~ 70℃	±0.3℃ (at 25℃)	2wire / 1.0㎟	
GST-N3K	NTC3000Ω	−10 ~ 70℃	±0.25℃ (at 25℃)	2wire / 1.0㎟	ACI/3K PRECON-2 (Model.22)

기술 사양 | Technical Data |

- 검출 소요 시간 : About 5min at 0.15m/sec Velocity
- 주위 온도 : −15 ~ +75
- 주위 습도 : 5 ~ 95% RH
- 적용 : DDC System and controller
- 온도 변화 : Table of Reference Values
- 보호 등급 : IP30
- 하우징 재질 : ABS (flame retardation)
- 무게 : 0.06Kg

주의 사항 | Notes |

· Installation positions : When the detector has to be installed on a wall in a room, the location of the detector must be kept between 1 to 1.5meters from the floor level. For accurate control of the temperature follow recommendation as ; avoid window access, behind furniture, dead spaces, behind curtain

· Sensor should not be exposed to direct sun light and wire tube should be shielded to protect sensing errors from the wind coming through wire tube. Sensors have to install more than 1.5m from the bottom.

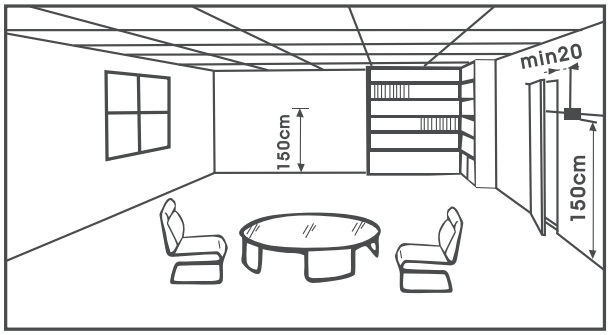

결선 방법 | Wiring Diagram |

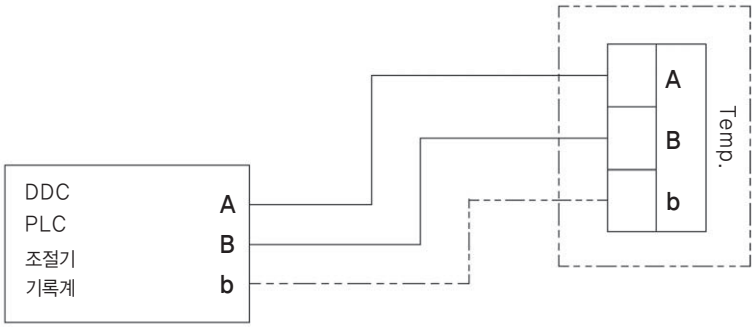

Pt100Ω (3wire) / Pt1000Ω (3wire) / NTC10KΩ / NTC5KΩ / NTC3KΩ

외형치수 | Shape Dimension |

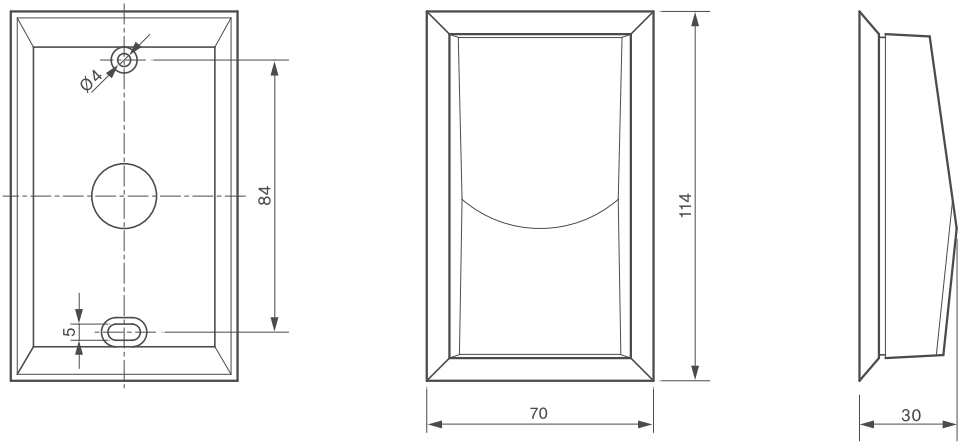

저항 변화표 | Thermistor NTC Curve Table |

온 도		NTC/10K-AN	NTC/10K-CP	NTC/5K	NTC/3K
Temp	Temp	Resistance	Resistance	Resistance	Resistance
℃	℉	ohms	ohms	ohms	ohms
-40	-40	239,831	335,671	88,910	100,701
-35	-31	179,280	242,195	68,190	72,658
-30	-22	135,233	176,683	52,870	53,005
-25	-13	102,890	130,243	41,210	39,073
-20	-4	78,930	96,974	32,440	29,092
-15	5	61,030	72,895	25,660	21,868
-10	14	47,549	55,298	20,480	16,589
-5	23	37,316	42,314.6	16,430	12,694.4
0	32	29,490	32,650.8	13,290	9,795.2
5	41	23,462	25,395.5	10,800	7,618.7
10	50	18,787	19,903.5	8,840	5,971.1
15	59	15,136	15,714.0	7,267	4,714.2
20	68	12,268	12,493.7	6,013	3,748.1
25	77	10,000	10,000	5,000	3,000
30	86	8,197	8,056.0	4,179	2,416.8
35	95	6,754	6,530.1	3,508	1,959.0
40	104	5,594	5,324.9	2,961	1,597.5
45	113	4,656	4,366.9	2,509	1,310.1
50	122	3,893	3,601.0	2,137	1,080.3
55	131	3,271	2,985.1	1,826	895.52
60	140	2,760	2,487.1	1,567	746.12
65	149	2,339	2,082.3	1,350	624.69
70	158	1,990	1,751.6	1,169	525.49
75	167	1,700	1,480.1	1,014	444.04
80	176	1,458	1,256.2	883.5	376.85
85	185	1,255	1,070.6	772.2	321.17
90	194	1,084	916.11	677.1	274.83
95	203	939.6	786.99	596.1	236.10
100	212	817.2	678.63	526.5	203.59
105	221	713.0	587.31	465.4	176.19
110	230	624.1	510.06	412.8	153.02
115	239	547.9	444.48	-	133.34
120	248	482.5	388.59	-	116.578
125	257	426.0	340.82	-	102.246
130	266	377.2	299.82	-	89.946
135	275	334.9	264.54	-	79.363
140	284	298.1	234.08	-	70.225
145	293	266.0	207.70	-	62.309
150	302	238.0	184.79	-	55.436