DRUM MOTORS



DSM-3001

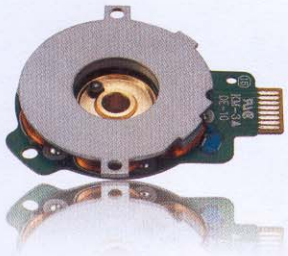

Specifications

Model	Rating		No Load		Rated Load		starting	Application
	Voltage	Load	Speed	Current	Speed	Current	Torque	
			rpm	mA	rpm	mA	gf-cm	
DSM-3001B	5V	2 gf-cm	3000±420	120 max	1,800	130 max	13 min	camcorder

DRAWING

UNIT : Millimeters

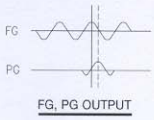

FG, PG OUTPUT

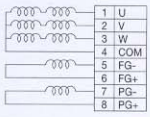

CIRCUIT DIAGRAM

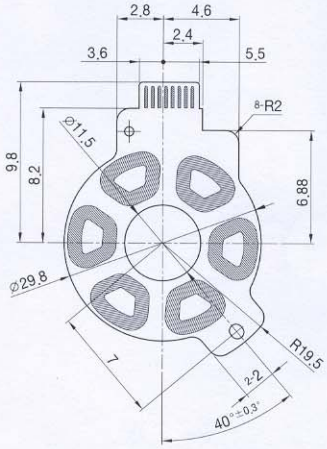

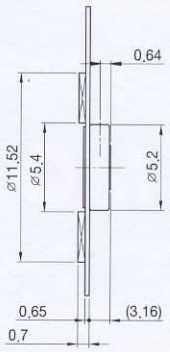

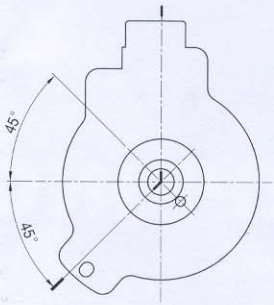

DSM-3001B

MODEL NO. : **DSM-3001B**
RATED VOLTAGE : 3 [V]
STARTING CURRENT : 0.26 [A]
STARTING TORQUE : 15.7 [g-cm]
MAX. OUTPUT : 0.13 [W]
MAX. EFFICIENCY : 32.4 [%]

[%]	[W]	[A]
50	0.25	0.50
40	0.20	0.40
30	0.15	0.30
20	0.10	0.20
10	0.05	0.10
0	0	0

η	P	I

