# Standard

## KD74 series



KD7405AWH

### For Packaged Products

### KD7405AWH/ADWH/BWH/BDWH

Maximum width Maximum height

Product size: 240 mm × 120 mm

## External Dimensions

KD7405AWH KD7405ADWH ※
KD7405BWH KD7405BDWH ※

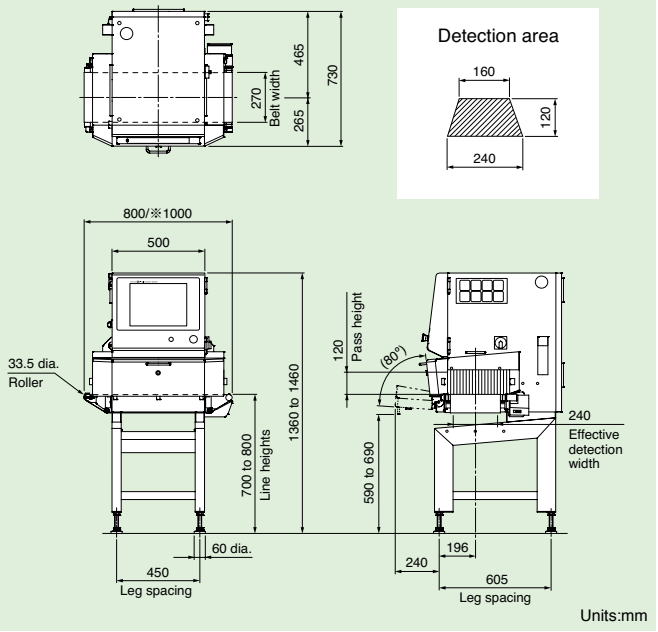


Units:mm

The conveyor is lengthened from 800 to 1000 for smooth product transfer.

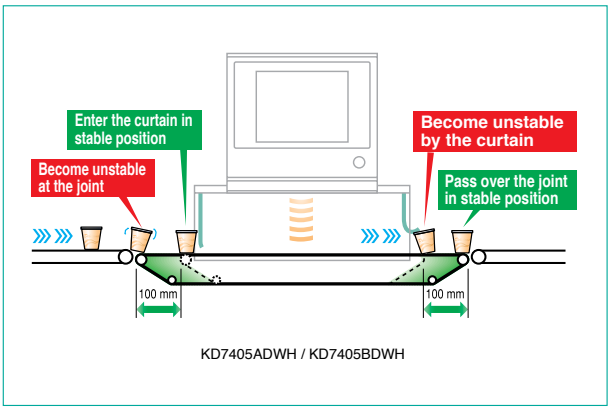


KD7405ADWH / KD7405BDWH

## Specifications

| Model | KD7405AWH | KD7405ADWH | KD7405BWH | KD7405BDWH |
|---|---|---|---|---|
| Detection sensitivity [1] | Fe sphere and SUS sphere 0.3 mm dia., SUS wire 0.2 mm dia.× 2 mm long | | | |
| X-ray output | Tube voltage 25 to 60 kV, tube current 0.3 to 7.0 mA, output 7.5 to 210 W | | Tube voltage 25 to 80 kV, tube current 0.3 to 7.0 mA, output 7.5 to 210 W | |
| Safety | X-ray leakage maximum 1 μSv/h or less, prevention of x-ray leakage by safety devices | | | |
| Display | 15-inch color TFT LCD (unified image monitoring screen and operation screen) | | | |
| Operation method | Touch panel (with touch buzzer) | | | |
| Product size [2] | Maximum width 240 mm, maximum height 120 mm (see drawing for detection area) | | | |
| Belt width | 270 mm | | | |
| Masking function | Equipped as standard | | | |
| Missing product detection function | Equipped as standard | | | |
| Clip check function | Equipped as standard | | | |
| Preset memory | Maximum 100 | | | |
| Belt speed [3] Maximum product weight [4] | 5 to 60 m/min, maximum 5 kg | | | |
| | 61 to 90 m/min, maximum 2 kg | | | |
| | 5 to 40 m/min, maximum 10 kg (optional) | | | |
| Power requirements [5, 6, 7] | 100 to 120 or 200 to 240 Vac, single phase, 50/60 Hz, 1.0 kVA, rush current 80 A (typ.) (5 ms or less) | | | |
| Mass | 210 kg | 215 kg | 220 kg | 225 kg |
| Environmental conditions [8] | Temperature: 0° to 35°C (0° to 40°C with optional air conditioner), relative humidity: 30% to 85%, non-condensing | | | |
| Protection class | Conveyor IP66, other parts IP40, tool free belt removal | | | |
| Exterior | Stainless steel (SUS304) | | | |

1: Actual sensitivity depends on the physical properties of products (contents and shape) and on the environmental conditions. 2: The entrance and exit may require covers depending on the length of a product. 3: Variable depending on Product No. 4: Sum total of product weight on the conveyor. 5: Selectable by switching terminals. Note that the rush current shown above is at an AC voltage of 200 V. It varies according to voltage. 6: Allowable power fluctuation range is ± 10%. 7: Installing the air-conditioner option changes the displayed power consumption. 8: The air-conditioner option may be required depending on the operating environment. Note: The noise level of x-ray inspection systems is 77 dB(A).

# Standard

## KD74 series

### For Packaged Products

### KD7416AWH/ADWH/BWH/BDWH

Maximum width Maximum height

Product size: 390 mm × 150 mm

### KD7417BWH

Maximum width Maximum height

Product size: 390 mm × 220 mm



KD7416AWH

## External Dimensions

KD7416AWH KD7416ADWH ※
KD7416BWH KD7416BDWH ※

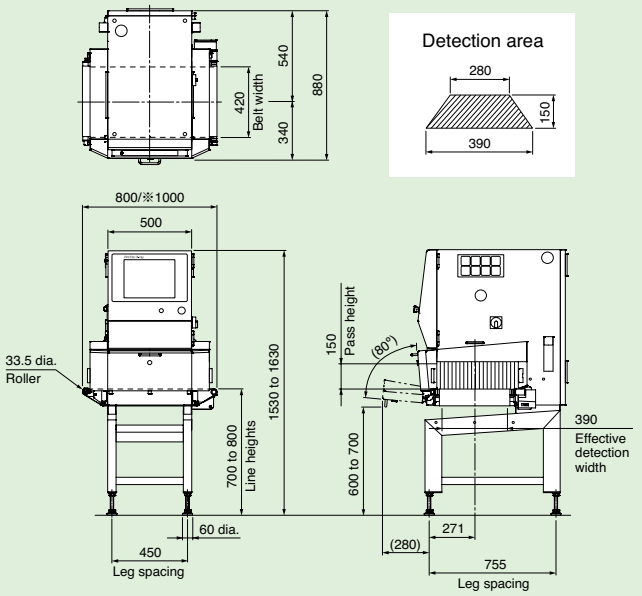


Units:mm

KD7417BWH

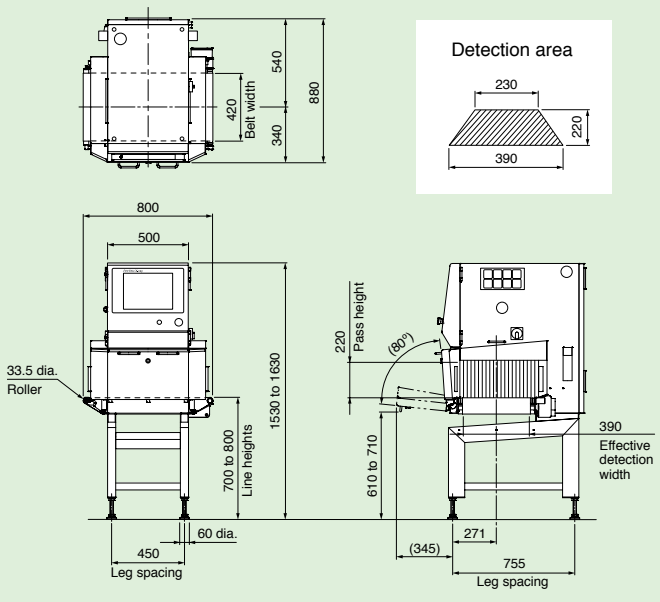


Units:mm

## Specifications

| Model | KD7416AWH | KD7416ADWH | KD7416BWH | KD7416BDWH | KD7417BWH |
|---|---|---|---|---|---|
| Detection sensitivity [1] | Fe sphere and SUS sphere 0.3 mm dia., SUS wire 0.2 mm dia.× 2 mm long | | | | |
| X-ray output | Tube voltage 25 to 60 kV, tube current 0.3 to 7.0 mA, output 7.5 to 210 W | | Tube voltage 25 to 80 kV, tube current 0.3 to 7.0 mA, output 7.5 to 210 W | | |
| Safety | X-ray leakage maximum 1 $\mu$Sv/h or less, prevention of x-ray leakage by safety devices | | | | |
| Display | 15-inch color TFT LCD (unified image monitoring screen and operation screen) | | | | |
| Operation method | Touch panel (with touch buzzer) | | | | |
| Product size [2, 3] | Maximum width 390 mm, maximum height 150 mm | | | | Maximum width 390 mm, maximum height 220 mm |
| Belt width | 420 mm | | | | |
| Masking function | Equipped as standard | | | | |
| Missing product detection function | Equipped as standard | | | | |
| Clip check function | Equipped as standard | | | | |
| Preset memory | Maximum 100 | | | | |
| Belt speed [4] | 5 to 60 m/min, maximum 5 kg | | | | 5 to 40 m/min, maximum 10 kg |
| Maximum product weight [5] | 5 to 40 m/min, maximum 10 kg (optional) | | | | — |
| Power requirements [6, 7, 8] | 100 to 120 or 200 to 240 Vac, single phase, 50/60 Hz, 1.0 kVA, rush current 80 A (typ.) (5 ms or less) | | | | |
| Mass | 255 kg | 260 kg | 265 kg | 270 kg | 265 kg |
| Environmental conditions [9] | Temperature: 0° to 35°C (0° to 40°C with optional air conditioner), relative humidity: 30% to 85%, non-condensing | | | | |
| Protection class | Conveyor IP66, other parts IP40, tool free belt removal | | | | |
| Exterior | Stainless steel (SUS304) | | | | |

1: Actual sensitivity depends on the physical properties of products (contents and shape) and on the environmental conditions. 2: The detection area is shown above. 3: The entrance and exit may require covers depending on the length of a product. 4: Variable depending on Product No. 5: Sum total of product weight on the conveyor. 6: Selectable by switching terminals. Note that the rush current shown above is at an AC voltage of 200 V. It varies according to voltage. 7: Allowable power fluctuation range is ± 10%. 8: Installing the air-conditioner option changes the displayed power consumption. 9: The air-conditioner option may be required depending on the operating environment. Note: The noise level of x-ray inspection systems is 77 dB(A).

# Standard

## KD74 series



KD7405ABWH

### For Bulk Flow of Unpacked Fresh Food

**KD7405ABWH**

Maximum width Maximum height

Product size: 240 mm × 50 mm

**KD7416ABWH**

Maximum width Maximum height

Product size: 390 mm × 50 mm



## External Dimensions

KD7405ABWH
KD7416ABWH ※

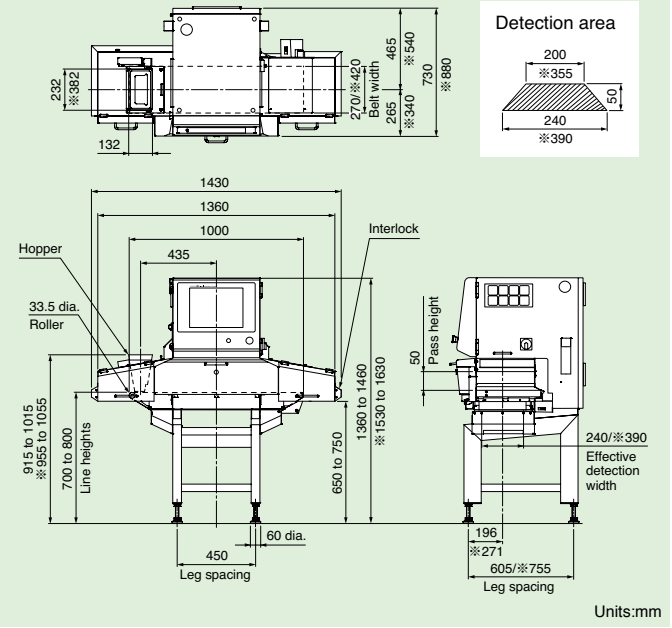


Units:mm

A shield plate and a x-ray leakage prevention cover prevent x-ray leakage.

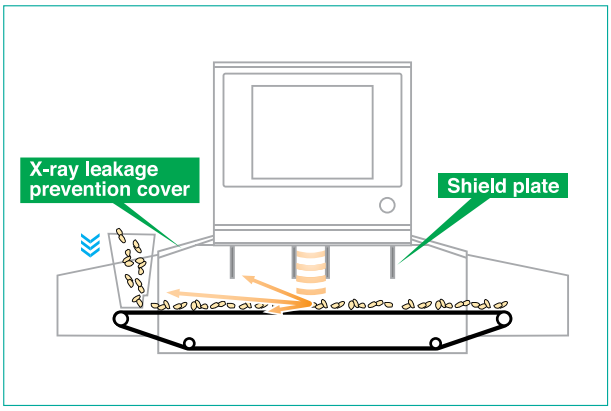


## Specifications

| Model | KD7405ABWH | KD7416ABWH |
|---|---|---|
| Detection sensitivity [1] | Fe sphere and SUS sphere 0.3 mm dia., SUS wire 0.2 mm dia.× 2 mm long | |
| X-ray output | Tube voltage 25 to 60 kV, tube current 0.3 to 7.0 mA, output 7.5 to 210 W | |
| Safety | X-ray leakage maximum 1 μSv/h or less, prevention of x-ray leakage by safety devices | |
| Display | 15-inch color TFT LCD (unified image monitoring screen and operation screen) | |
| Operation method | Touch panel (with touch buzzer) | |
| Product size [2, 3] | Maximum width 240 mm, maximum height 50 mm | Maximum width 390 mm, maximum height 50 mm |
| Belt width | 270 mm | 420 mm |
| Masking function | Equipped as standard | |
| Missing product detection function | Equipped as standard | |
| Clip check function | Equipped as standard | |
| Preset memory | Maximum 100 | |
| Belt speed [4] | 5 to 50 m/min, maximum 5 kg | |
| Maximum product weight [5] | 5 to 40 m/min, maximum 10 kg (optional) | |
| Power requirements [6, 7, 8] | 100 to 120 or 200 to 240 Vac, single phase, 50/60 Hz, 1.0 kVA, rush current 80 A (typ.) (5 ms or less) | |
| Mass | 230 kg | 280 kg |
| Environmental conditions [9] | Temperature: 0° to 35°C (0° to 40°C with optional air conditioner), relative humidity: 30% to 85%, non-condensing | |
| Protection class | Conveyor IP66, other parts IP40, tool free belt removal | |
| Exterior | Stainless steel (SUS304) | |

1: Actual sensitivity depends on the physical properties of products (contents and shape) and on the environmental conditions. 2: The detection area is shown above. 3: The entrance and exit may require covers depending on the length of a product. 4: Variable depending on Product No. 5: Sum total of product weight on the conveyor. 6: Selectable by switching terminals. Note that the rush current shown above is at an AC voltage of 200 V. It varies according to voltage. 7: Allowable power fluctuation range is ± 10%. 8: Installing the air-conditioner option changes the displayed power consumption. 9: The air-conditioner option may be required depending on the operating environment. Note: The noise level of x-ray inspection systems is 77 dB(A).

# Standard

## KD74 series

### For Lightweight Products and Those in Small Bags

**KD7405ACWH**

Maximum width Maximum height

Product size: 240 mm × 50 mm

**KD7416ACWH**

Maximum width Maximum height

Product size: 390 mm × 50 mm



KD7405ACWH

### External Dimensions

KD7405ACWH
KD7416ACWH ※

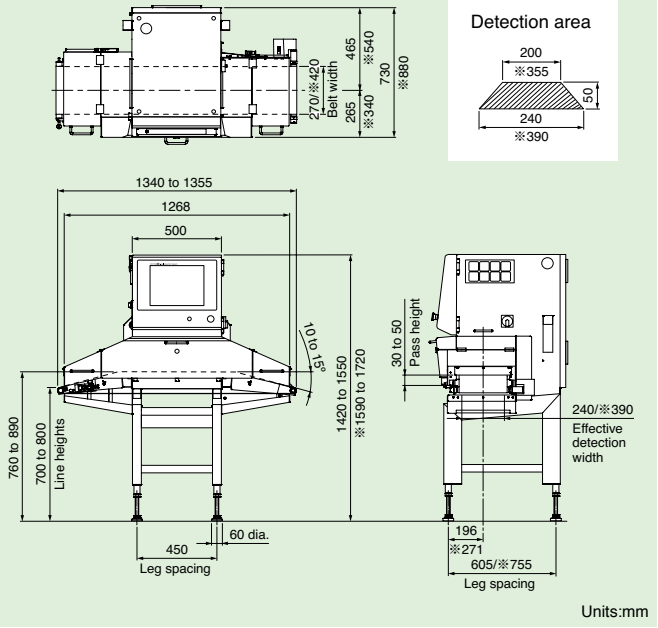


Units:mm

Instead of x-ray protection curtains that could disrupt product flow, an inclined conveyor with covers is equipped for stable conveyance.

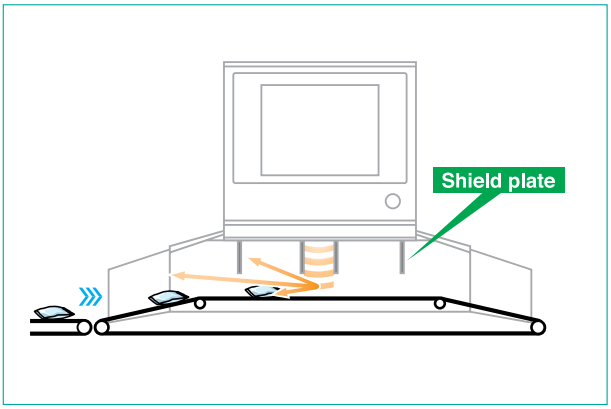


### Specifications

| Model | KD7405ACWH | KD7416ACWH |
|---|---|---|
| Detection sensitivity [1] | Fe sphere and SUS sphere 0.3 mm dia., SUS wire 0.2 mm dia.× 2 mm long | |
| X-ray output | Tube voltage 25 to 60 kV, tube current 0.3 to 7.0 mA, output 7.5 to 210 W | |
| Safety | X-ray leakage maximum 1 μSv/h or less, prevention of x-ray leakage by safety devices | |
| Display | 15-inch color TFT LCD (unified image monitoring screen and operation screen) | |
| Operation method | Touch panel (with touch buzzer) | |
| Product size [2, 3] | Maximum width 240 mm, maximum height 50 mm | Maximum width 390 mm, maximum height 50 mm |
| Belt width | 270 mm | 420 mm |
| Masking function | Equipped as standard | |
| Missing product detection function | Equipped as standard | |
| Clip check function | Equipped as standard | |
| Preset memory | Maximum 100 | |
| Belt speed [4] | 5 to 50 m/min, maximum 5 kg | |
| Maximum product weight [5] | 5 to 40 m/min, maximum 10 kg (optional) | |
| Power requirements [6, 7, 8] | 100 to 120 or 200 to 240 Vac, single phase, 50/60 Hz, 1.0 kVA, rush current 80 A (typ.) (5 ms or less) | |
| Mass | 230 kg | 285 kg |
| Environmental conditions [9] | Temperature: 0° to 35°C (0° to 40°C with optional air conditioner), relative humidity: 30% to 85%, non-condensing | |
| Protection class | Conveyor IP66, other parts IP40, tool free belt removal | |
| Exterior | Stainless steel (SUS304) | |

1: Actual sensitivity depends on the physical properties of products (contents and shape) and on the environmental conditions. 2: The detection area is shown above. 3: The entrance and exit may require covers depending on the length of a product. 4: Variable depending on Product No. 5: Sum total of product weight on the conveyor. 6: Selectable by switching terminals. Note that the rush current shown above is at an AC voltage of 200 V. It varies according to voltage. 7: Allowable power fluctuation range is ± 10%. 8: Installing the air-conditioner option changes the displayed power consumption. 9: The air-conditioner option may be required depending on the operating environment. Note: The noise level of x-ray inspection systems is 77 dB(A).

# High Definition

## KD74-h series

### For Packaged Products

### KD7405CWT/DWT

Maximum width Maximum height

Product size: 240 mm × 120 mm



KD7405DWT



## External Dimensions

KD7405CWT
KD7405DWT

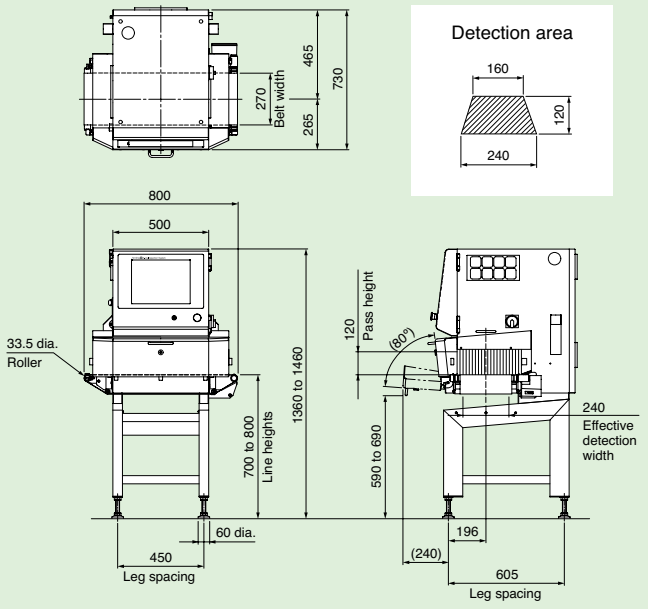


Units:mm

## Specifications

| Model | KD7405CWT | KD7405DWT |
|---|---|---|
| Detection sensitivity [1] | Fe sphere and SUS sphere 0.2 mm dia. [2], SUS wire 0.2 mm dia.× 2 mm long | |
| X-ray output | Tube voltage 25 to 60 kV, tube current 0.3 to 7.0 mA, output 7.5 to 300 W | Tube voltage 25 to 80 kV, tube current 0.3 to 10.0 mA, output 7.5 to 350 W |
| Safety | X-ray leakage maximum 1 $\mu$Sv/h or less, prevention of x-ray leakage by safety devices | |
| Display | 15-inch color TFT LCD (unified image monitoring screen and operation screen) | |
| Operation method | Touch panel (with touch buzzer) | |
| Product size [3] | Maximum width 240 mm, maximum height 120 mm (see drawing for detection area) | |
| Belt width | 270 mm | |
| Masking function | Equipped as standard | |
| Missing product detection function | Equipped as standard | |
| Clip check function | Equipped as standard | |
| Preset memory | Maximum 100 | |
| Belt speed [4]<br>Maximum product weight [5] | 10 to 60 m/min, maximum 5 kg | |
| | 61 to 90 m/min, maximum 2 kg | |
| | 5 to 40 m/min, maximum 10 kg (optional) | |
| Power requirements [6, 7, 8] | 100 to 120 or 200 to 240 Vac, single phase, 50/60 Hz, 1.0 kVA, rush current 80 A (typ.) (5 ms or less) | |
| Mass | 230 kg | |
| Environmental conditions [9] | Temperature: 0° to 35°C (0° to 40°C with optional air conditioner), relative humidity: 30% to 85%, non-condensing | |
| Protection class | Conveyor IP66, other parts IP40, tool free belt removal | |
| Exterior | Stainless steel (SUS304) | |

1: Actual sensitivity depends on the physical properties of products (contents and shape) and on the environmental conditions. 2: Reference value using Anritsu test piece. 3: The entrance and exit may require covers depending on the length of a product. 4: Variable depending on Product No. 5: Sum total of product weight on the conveyor. 6: Selectable by switching terminals. Note that the rush current shown above is at an AC voltage of 200 V. It varies according to voltage. 7: Allowable power fluctuation range is ± 10%. 8: Installing the air-conditioner option changes the displayed power consumption. 9: The air-conditioner option may be required depending on the operating environment. Note: The noise level of x-ray inspection systems is 77 dB(A).

# High Definition

## KD74-h series



KD7416DWH

### For Packaged Products

**KD7405DWH**

Maximum width Maximum height

Product size: 240 mm × 120 mm

**KD7416DWH**

Maximum width Maximum height

Product size: 390 mm × 150 mm

**KD7417DWH**

Maximum width Maximum height

Product size: 390 mm × 220 mm

### External Dimensions

KD7405DWH

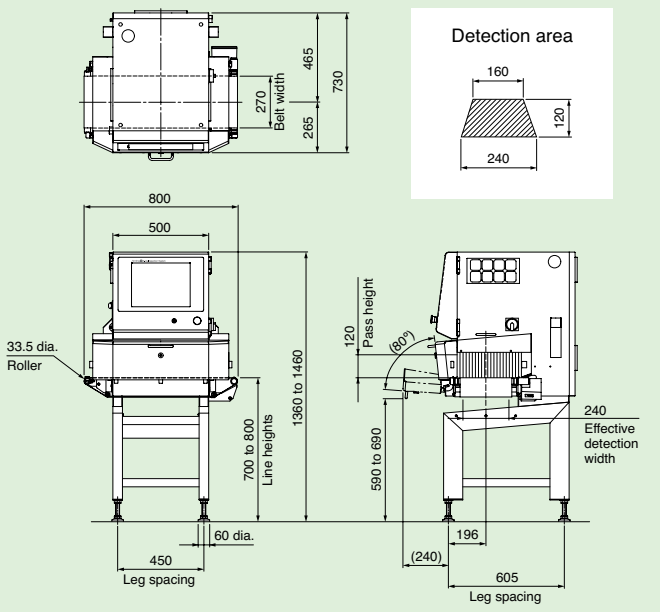


Units:mm

KD7416DWH
KD7417DWH ※

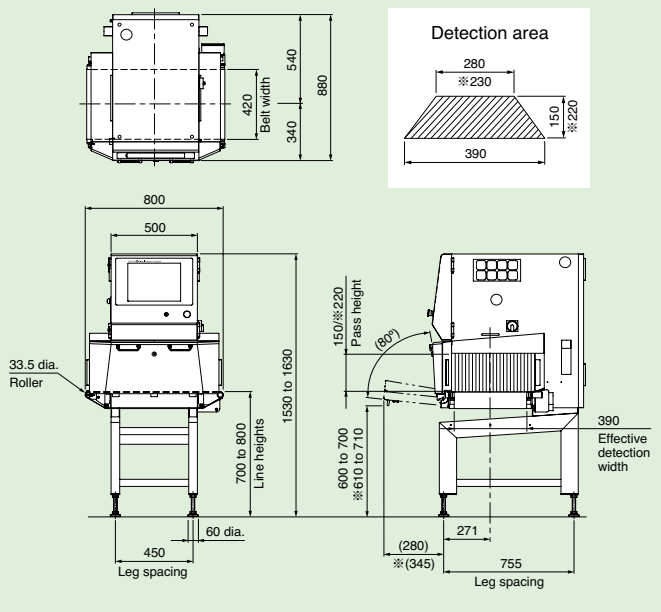


Units:mm

### Specifications

| Model | KD7405DWH | KD7416DWH | KD7417DWH |
|---|---|---|---|
| Detection sensitivity [1] | Fe sphere and SUS sphere 0.3 mm dia., SUS wire 0.2 mm dia.× 2 mm long | | |
| X-ray output | Tube voltage 25 to 80 kV, tube current 0.3 to 10.0 mA, output 7.5 to 350 W | | |
| Safety | X-ray leakage maximum 1 $\mu$Sv/h or less, prevention of x-ray leakage by safety devices | | |
| Display | 15-inch color TFT LCD (unified image monitoring screen and operation screen) | | |
| Operation method | Touch panel (with touch buzzer) | | |
| Product size [2, 3] | Maximum width 240 mm, maximum height 120 mm | Maximum width 390 mm, maximum height 150 mm | Maximum width 390 mm, maximum height 220 mm |
| Belt width | 270 mm | 420 mm | |
| Masking function | Equipped as standard | | |
| Missing product detection function | Equipped as standard | | |
| Clip check function | Equipped as standard | | |
| Preset memory | Maximum 100 | | |
| Belt speed [4] Maximum product weight [5] | 10 to 60 m/min, maximum 5 kg | 5 to 60 m/min, maximum 5 kg | 5 to 40 m/min, maximum 10 kg |
| | 61 to 90 m/min, maximum 2 kg | 5 to 40 m/min, maximum 10 kg (optional) | —— |
| | 5 to 40 m/min, maximum 10 kg (optional) | —— | —— |
| Power requirements [6, 7, 8] | 100 to 120 or 200 to 240 Vac, single phase, 50/60 Hz, 1.0 kVA, rush current 80 A (typ.) (5 ms or less) | | |
| Mass | 230 kg | 280 kg | |
| Environmental conditions [9] | Temperature: 0° to 35°C (0° to 40°C with optional air conditioner), relative humidity: 30% to 85%, non-condensing | | |
| Protection class | Conveyor IP66, other parts IP40, tool free belt removal | | |
| Exterior | Stainless steel (SUS304) | | |

1: Actual sensitivity depends on the physical properties of products (contents and shape) and on the environmental conditions. 2: The detection area is shown above. 3: The entrance and exit may require covers depending on the length of a product. 4: Variable depending on Product No. 5: Sum total of product weight on the conveyor. 6: Selectable by switching terminals. Note that the rush current shown above is at an AC voltage of 200 V. It varies according to voltage. 7: Allowable power fluctuation range is ± 10%. 8: Installing the air-conditioner option changes the displayed power consumption. 9: The air-conditioner option may be required depending on the operating environment. Note: The noise level of x-ray inspection systems is 77 dB(A).

# Entry

## KD74-f series



KD7405KP

### For Packaged Products

**KD7405KP/KDP**

Maximum width Maximum height

Product size: 240 mm × 120 mm

### For Lightweight Products and Those in Small Bags

**KD7405KCP**

Maximum width Maximum height

Product size: 240 mm × 50 mm

## External Dimensions

KD7405KP
KD7405KDP ※

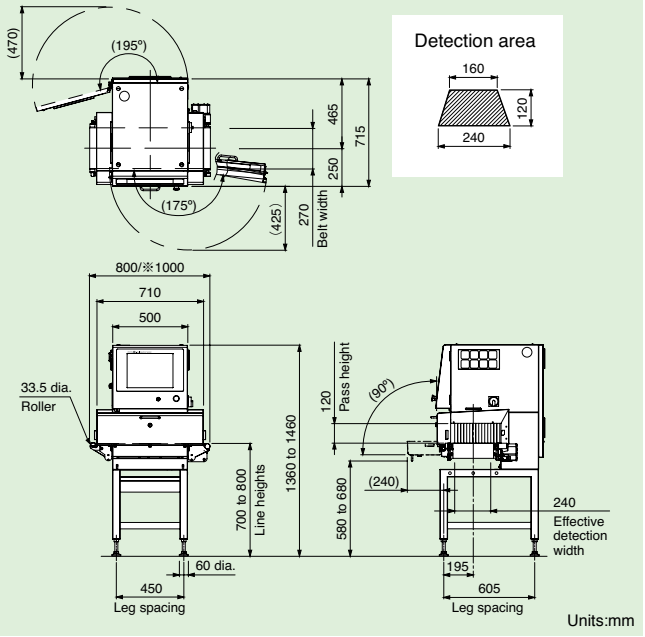


Units:mm

KD7405KCP

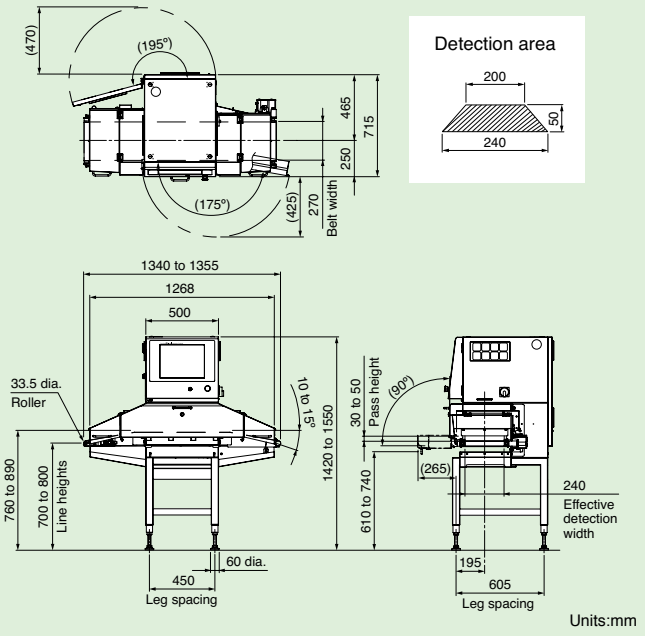


Units:mm

## Specifications

| Model | KD7405KP | KD7405KDP | KD7405KCP |
|---|---|---|---|
| Detection sensitivity [1] | Fe sphere and SUS sphere 0.3 mm dia., SUS wire 0.2 mm dia.× 2 mm long | | |
| X-ray output | Tube voltage 25 to 50 kV, tube current 0.3 to 4.0 mA, output 7.5 to 100 W | | |
| Safety | X-ray leakage maximum 1 $\mu$Sv/h or less, prevention of x-ray leakage by safety devices | | |
| Display | 15-inch color TFT LCD (unified image monitoring screen and operation screen) | | |
| Operation method | Touch panel (with touch buzzer) | | |
| Product size [2, 3] | Maximum width 240 mm, maximum height 120 mm | | Maximum width 240 mm, maximum height 50 mm |
| Belt width | 270 mm | | |
| Masking function | Equipped as standard | | |
| Missing product detection function | Equipped as standard | | |
| Clip check function | Equipped as standard | | |
| Preset memory | Maximum 100 | | |
| Belt speed [4] Maximum product weight [5] | 5 to 60 m/min, maximum 3 kg | | 5 to 50 m/min, maximum 3 kg |
| | 61 to 80 m/min, maximum 2 kg | | 5 to 35 m/min, maximum 6 kg (optional) |
| | 5 to 35 m/min, maximum 6 kg (optional) | | — |
| Power requirements [6, 7, 8] | 100 to 120 or 200 to 240 Vac, single phase, 50/60 Hz, 700 VA, rush current 80 A (typ.) (5 ms or less) | | |
| Mass | 200 kg | 205 kg | 220 kg |
| Environmental conditions [9] | Temperature: 0° to 35°C (0° to 40°C with optional air conditioner), relative humidity: 30% to 85%, non-condensing | | |
| Protection class | Conveyor IP40, tool free belt removal | | |
| Exterior | Stainless steel (SUS304) | | |

1: Actual sensitivity depends on the physical properties of products (contents and shape) and on the environmental conditions. 2: The detection area is shown above. 3: The entrance and exit may require covers depending on the length of a product. 4: Variable depending on Product No. 5: Sum total of product weight on the conveyor. 6: Selectable by switching terminals. Note that the rush current shown above is at an AC voltage of 200 V. It varies according to voltage. 7: Allowable power fluctuation range is ± 10%. 8: Installing the air-conditioner option changes the displayed power consumption. 9: The air-conditioner option may be required depending on the operating environment. Note: The noise level of x-ray inspection systems is 72 dB(A).

# DualX

## KD74 series DUAL ENERGY

### For Packaged Products

**KD7416AWZE/ADWZE**

Maximum width Maximum height

Product size: 390 mm × 150 mm

### For Lightweight Products and Those in Small Bags

**KD7416ACWZE**

Maximum width Maximum height

Product size: 390 mm × 50 mm



KD7416AWZE

## External Dimensions

KD7416AWZE
KD7416ADWZE ※

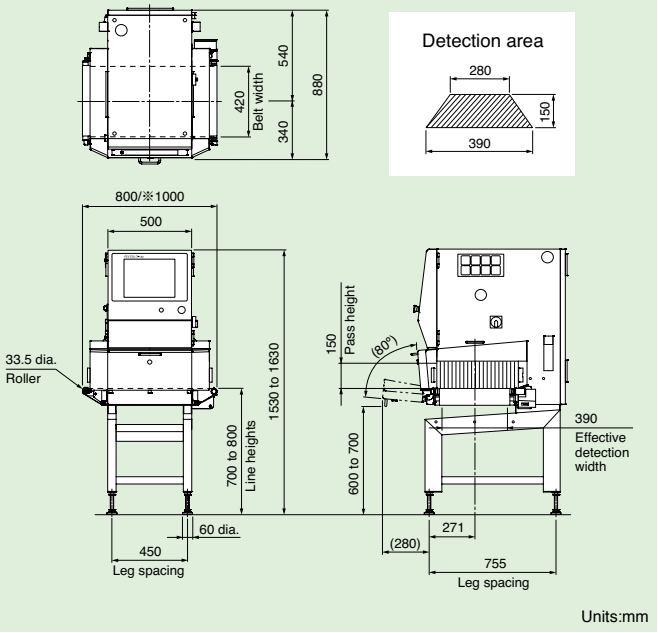


Units:mm

KD7416ACWZE

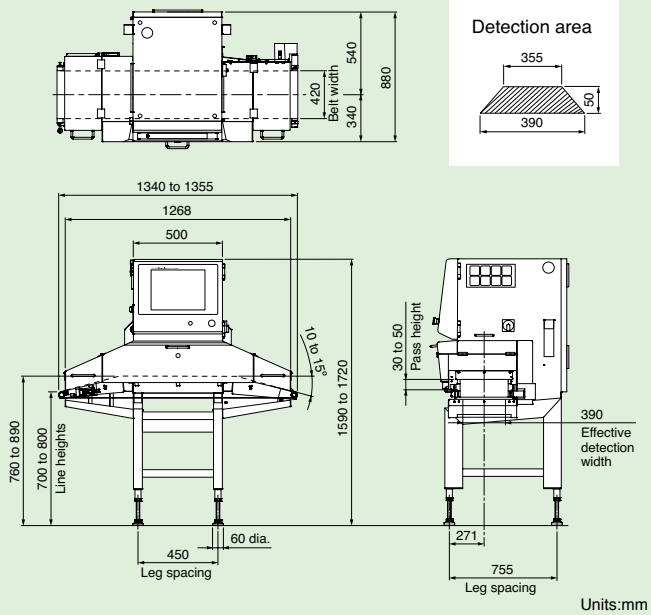


Units:mm

## Specifications

| Model | KD7416AWZE | KD7416ADWZE | KD7416ACWZE |
|---|---|---|---|
| X-ray output | Tube voltage 25 to 60 kV, tube current 0.3 to 7.0 mA, output 7.5 to 210 W | | |
| Safety | X-ray leakage maximum 1 $\mu$Sv/h or less, prevention of x-ray leakage by safety devices | | |
| Display | 15-inch color TFT LCD (unified image monitoring screen and operation screen) | | |
| Operation method | Touch panel (with touch buzzer) | | |
| Product size [1, 2] | Maximum width 390 mm, maximum height 150 mm | | Maximum width 390 mm, maximum height 50 mm |
| Belt width | 420 mm | | |
| Masking function | Equipped as standard | | |
| Missing product detection function | Equipped as standard | | |
| Clip check function | Equipped as standard | | |
| Preset memory | Maximum 100 | | |
| Belt speed [3] | 10 to 60 m/min, maximum 5 kg | | 10 to 50 m/min, maximum 5 kg |
| Maximum product weight [4] | 10 to 40 m/min, maximum 10 kg (optional) | | 10 to 40 m/min, maximum 10 kg (optional) |
| Power requirements [5, 6, 7] | 100 to 120 or 200 to 240 Vac, single phase, 50/60 Hz, 1.0 kVA, rush current 80 A (typ.) (5 ms or less) | | |
| Mass | 255 kg | 260 kg | 285 kg |
| Environmental conditions [8] | Temperature: 0° to 35°C (0° to 40°C with optional air conditioner), relative humidity: 30% to 85%, non-condensing | | |
| Protection class | Conveyor IP66, other parts IP40, tool free belt removal | | |
| Exterior | Stainless steel (SUS304) | | |

1: The detection area is shown above. 2: The entrance and exit may require covers depending on the length of a product. 3: Variable depending on Product No. 4: Sum total of product weight on the conveyor. 5: Selectable by switching terminals. Note that the rush current shown above is at an AC voltage of 200 V. It varies according to voltage. 6: Allowable power fluctuation range is ± 10%. 7: Installing the air-conditioner option changes the displayed power consumption. 8: The air-conditioner option may be required depending on the operating environment. Note: The noise level of x-ray inspection systems does not exceed 70 dB(A).

# DualX

## KD74 series DUAL ENERGY



KD7416DWZ

## For Packaged Products

### KD7416DWZ

Maximum width Maximum height

Product size: 390 mm × 150 mm

### External Dimensions

KD7416DWZ

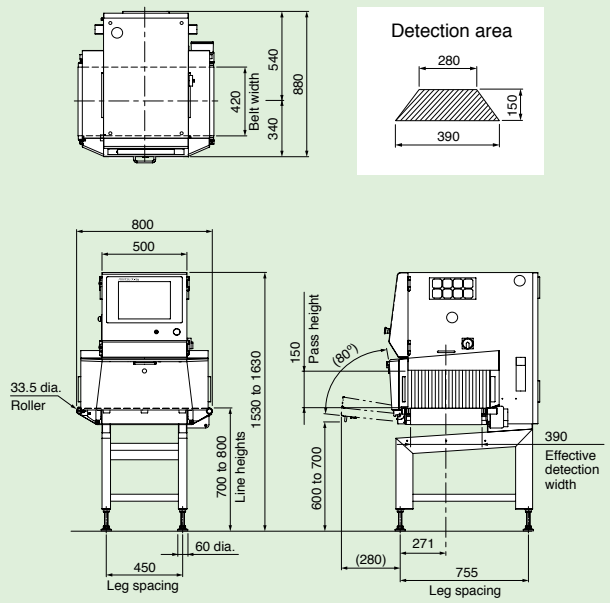


Units:mm

### Specifications

| | |
|---|---|
| Model | KD7416DWZ |
| X-ray output | Tube voltage 25 to 80 kV, tube current 0.4 to 10.0 mA, output 10 to 350 W |
| Safety | X-ray leakage maximum 1 $\mu$Sv/h or less, prevention of x-ray leakage by safety devices |
| Safety | 15-inch color TFT LCD (unified image monitoring screen and operation screen) |
| Display | Touch panel (with touch buzzer) |
| Product size [1] | Maximum width 390 mm, maximum height 150 mm (see drawing for detection area) |
| Belt width | 420 mm |
| Masking function | Equipped as standard |
| Missing product detection function | Equipped as standard |
| Clip check function | Equipped as standard |
| Preset memory | Maximum 100 |
| Belt speed [2] | 5 to 60 m/min, maximum 5 kg |
| Maximum product weight [3] | 5 to 40 m/min, maximum 10 kg (optional) |
| Power requirements [4, 5, 6] | 100 to 120 or 200 to 240 Vac, single phase, 50/60 Hz, 1.0 kVA, rush current 80 A (typ.) (5 ms or less) |
| Mass | 280 kg |
| Environmental conditions [7] | Temperature: 0° to 35°C (0° to 40°C with optional air conditioner), relative humidity: 30% to 85%, non-condensing |
| Protection class | Conveyor IP66, other parts IP40, tool free belt removal |
| Exterior | Stainless steel (SUS304) |

1: The entrance and exit may require covers depending on the length of a product. 2: Variable depending on Product No. 3: Sum total of product weight on the conveyor. 4: Selectable by switching terminals. Note that the rush current shown above is at an AC voltage of 200 V. It varies according to voltage. 5: Allowable power fluctuation range is ± 10%. 6: Installing the air-conditioner option changes the displayed power consumption. 7: The air-conditioner option may be required depending on the operating environment. Note: The noise level of x-ray inspection systems is 77 dB(A).

# For Specific Applications Sanitary Design

## KD74 series Sp

IP69K



KD7416ACM
Air conditioner is equipped as standard.

### For Packaged Products

**KD7416AM**

Maximum width Maximum height
Product size: 365 mm × 150 mm

### For Unpackaged Fresh Meat, Poultry and Fish

**KD7416ACM**

Maximum width Maximum height
Product size: 365 mm × 50 mm

KD7416ADM (1000-mm long) and KD7416ABM (Hopper loading system) are also available. Contact our sales representatives for details.

## External Dimensions

KD7416AM

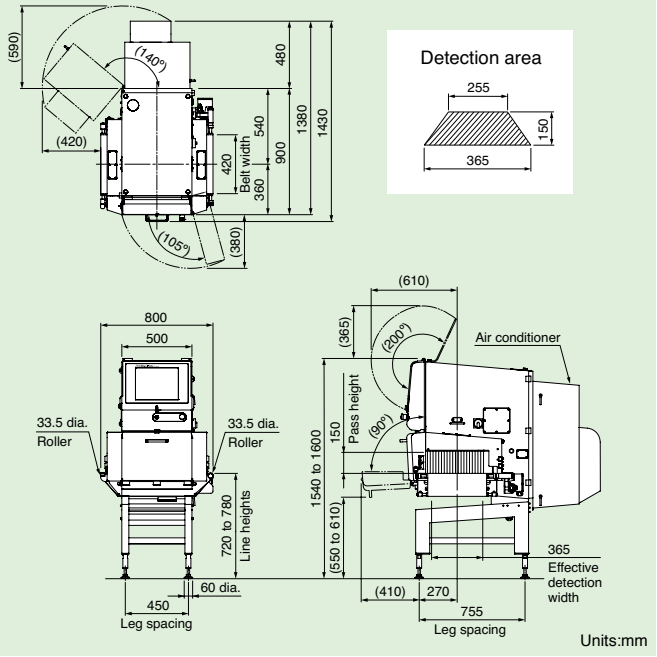


Units:mm

KD7416ACM

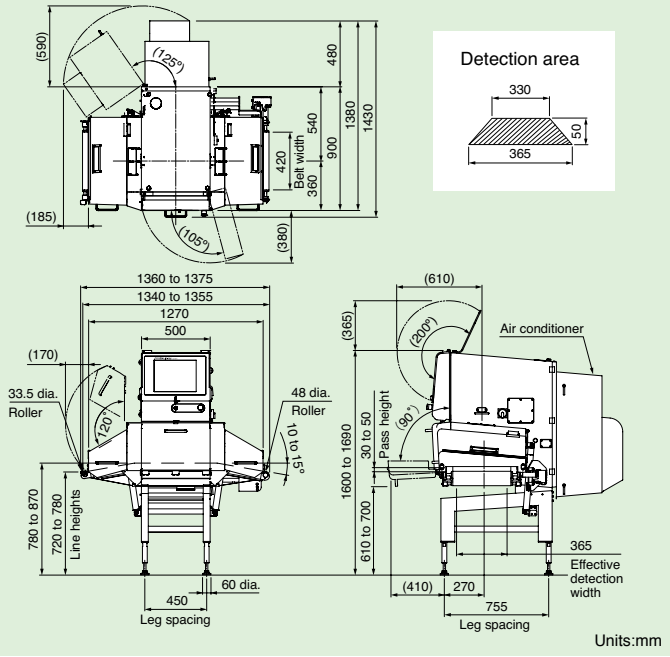


Units:mm

## Specifications

| Model | KD7416AM | KD7416ACM |
|---|---|---|
| Detection sensitivity [1] | Fe sphere and SUS sphere 0.3 mm dia., SUS wire 0.2 mm dia.× 2 mm long | |
| X-ray output | Tube voltage 25 to 60 kV, tube current 0.3 to 7.0 mA, output 7.5 to 210 W | |
| Safety | X-ray leakage maximum 1 $\mu$Sv/h or less, prevention of x-ray leakage by safety devices | |
| Display | 15-inch color TFT LCD (unified image monitoring screen and operation screen) | |
| Operation method | Touch panel (with touch buzzer) | |
| Product size [2, 3] | Maximum width 365 mm, maximum height 150 mm | Maximum width 365 mm, maximum height 50 mm |
| Belt width | 420 mm | |
| Masking function | Equipped as standard | |
| Missing product detection function | Equipped as standard | |
| Clip check function | Equipped as standard | |
| Preset memory | Maximum 100 | |
| Belt speed [4] | 5 to 40 m/min, maximum 5 kg | 5 to 50 m/min, maximum 3 kg |
| Maximum product weight [5] | 5 to 35 m/min, maximum 10 kg (optional) | 5 to 35 m/min, maximum 8 kg (optional) |
| Power requirements [6, 7] | 100 to 120 or 200 to 240 Vac, single phase, 50/60 Hz, 1.6 kVA, rush current 80 A (typ.) (5 ms or less) | |
| Mass | 335 kg | 355 kg |
| Environmental conditions | Temperature: 0° to 35°C, relative humidity: 30% to 85%, non-condensing | |
| Protection class [8] | IP69K (with all protection covers closed) | |
| Exterior | Stainless steel (SUS304) | |
| Cooling system | Air conditioner (standard equipped) | |

1: Actual sensitivity depends on the physical properties of products (contents and shape) and on the environmental conditions. 2: The detection area is shown above. 3: The entrance and exit may require covers depending on the length of a product. 4: Variable depending on Product No. 5: Sum total of product weight on the conveyor. 6: Selectable by switching terminals. Note that the rush current shown above is at an AC voltage of 200 V. It varies according to voltage. 7: Allowable power fluctuation range is ± 10%. 8: Excluding air-conditioner ventilation hole. Note: The noise level of x-ray inspection systems is 82 dB(A).

# For Specific Applications Tall Products

## KD74 series Sp



KD7478AWH

### For Packaged Products

### KD7478AWH/BWH

Maximum width Maximum height

Product size: 120 mm × 350 mm

Note: Not usable for glass containers.

### External Dimensions

KD7478AWH
KD7478BWH

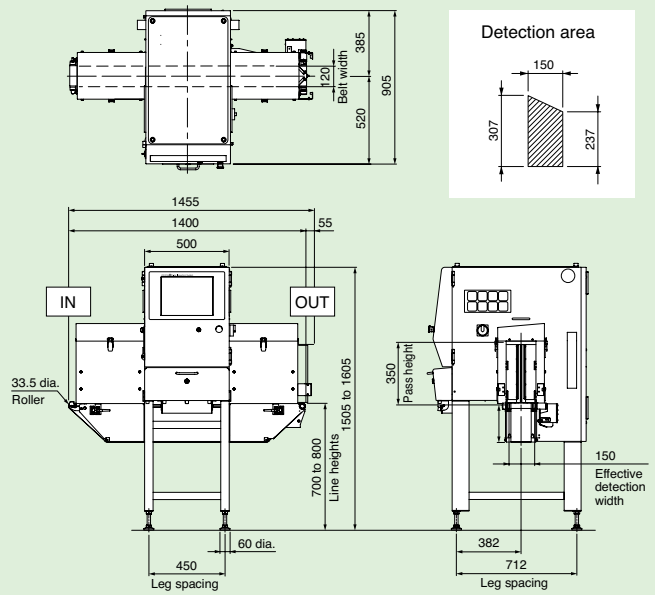


Flow direction can be changed. Units:mm

### Specifications

| Model | KD7478AWH | KD7478BWH |
|---|---|---|
| Detection sensitivity [1] | Fe sphere and SUS sphere 0.4 mm dia. | |
| X-ray output | Tube voltage 25 to 60 kV, tube current 0.3 to 7.0 mA, output 7.5 to 210 W | Tube voltage 25 to 80 kV, tube current 0.3 to 7.0 mA, output 7.5 to 210 W |
| Safety | X-ray leakage maximum 1 $\mu$Sv/h or less, prevention of x-ray leakage by safety devices | |
| Display | 15-inch color TFT LCD (unified image monitoring screen and operation screen) | |
| Operation method | Touch panel (with touch buzzer) | |
| Product size [2] | Maximum width 120 mm, maximum height 350 mm (see drawing for detection area) | |
| Belt width | 120 mm | |
| Masking function | Equipped as standard | |
| Missing product detection function | Equipped as standard | |
| Clip check function | Equipped as standard | |
| Preset memory | Maximum 100 | |
| Belt speed [3]<br>Maximum product weight [4] | 5 to 60 m/min, maximum 5 kg | |
| Power requirements [5, 6, 7] | 100 to 120 or 200 to 240 Vac, single phase, 50/60 Hz, 1.0 kVA, rush current 80 A (typ.) (5 ms or less) | |
| Mass | 310 kg | 315 kg |
| Environmental conditions [8] | Temperature: 0° to 35°C (0° to 40°C with optional air conditioner), relative humidity: 30% to 85%, non-condensing | |
| Protection class | Conveyor IP66, other parts IP40, tool free belt removal | |
| Exterior | Stainless steel (SUS304) | |

1: Actual sensitivity depends on the physical properties of products (contents and shape) and on the environmental conditions. 2: The entrance and exit may require covers depending on the length of a product. 3: Variable depending on Product No. 4: Sum total of product weight on the conveyor. 5: Selectable by switching terminals. Note that the rush current shown above is at an AC voltage of 200 V. It varies according to voltage. 6: Allowable power fluctuation range is ± 10%. 7: Installing the air-conditioner option changes the displayed power consumption. 8: The air-conditioner option may be required depending on the operating environment. Note: The noise level of x-ray inspection systems does not exceed 70 dB(A).