Model TSRT
Temperature Transmitter

Description

TSRT sensing element has excellent properties by using RTD and remote transmission is implemented with the 2wire 4~20mA output. It is Protection (IP65) to be used under poor environments.



Features

- Two wire 4~20mA output
- Measuring range -50~400℃
- 0.5%FS accuracy
- Stainless steel(316L) media-wetted materials

Applications

- Chemical & Petrochemical
- Process Control & Monitoring
- Food & Pharmaceutical
- Plant utility monitoring

Specifications

Range	
	-50~0, -50~50, 0~50, 100, 200, 300, 400℃
Sensing Element	
	Sheathed RTD(PT100Ω)
Performance	
Accuracy	±0.5%FS
Ambient Temperature Range	-20 ~ 80℃
Storage Temperature Range	-40 ~ 100℃
Electrical	
Excitation	11 ~ 28VDC
Output	4~20mA(2Wire)
Electrical Connection	Connector, DIN Connector, Head-G(PF)1/2"
Physical	
Vibration	49.1m/s^2{5G}, 10~500Hz
Shock	490m/s^2{50G}
Process Connection	R(PT)1/2", Flange & Other Connection Available on Request
Media-Wetted Materials	Stainless Steel 316, Other Available on Request
Protection	IP65 (Only DIN Connector, Head)
Weight	Approx. 300g (Standard type only)

Dimension

▶ Connector Type

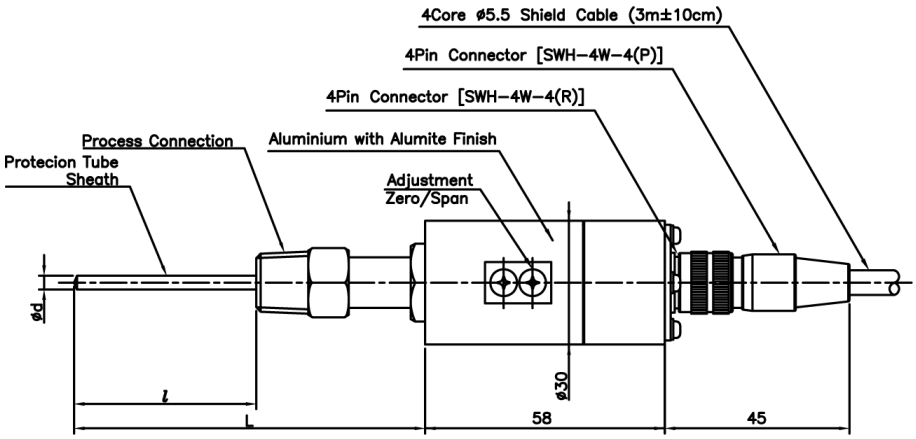

Pin No.	Wire Color	Connections
1	Red	Input ⊕
2	-	×
3	Black	Output ⊕
4	-	×
	Shield	Earth

▶ Din connector Type

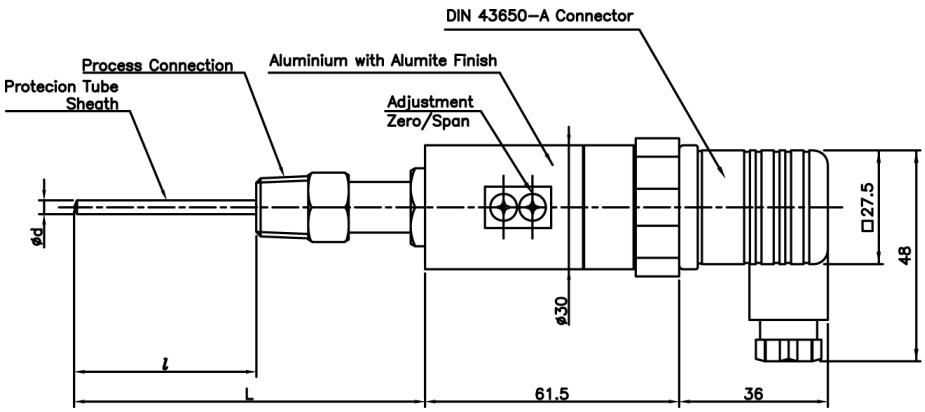

Pin No.	Connections
1	Input ⊕
2	Output ⊕
3	×
⏚	Earth

▶ Head Type

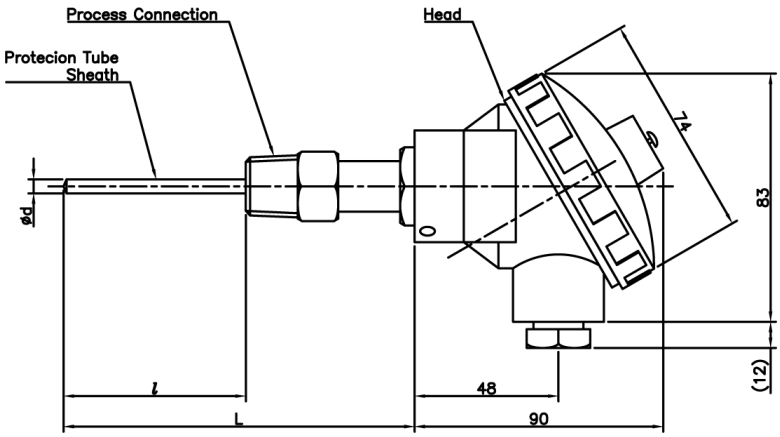

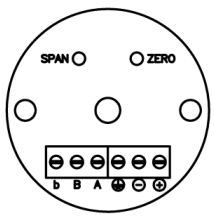

Transmitter Module
(TA100)

Pin No.	Connections
A	PT100Ω A
B	PT100Ω B
b	PT100Ω b
⏚	Earth
-	OUTPUT⊕
+	INPUT⊕

Ordering Information

TSRT 0010 C 48-100/50-G/A-H

Model Name

Temperature Range

C050 : -50~0℃	0200 : 0~200℃
±050 : -50~50℃	0300 : 0~300℃
0050 : 0~50℃	0400 : 0~400℃
0100 : 0~100℃	

Temperature Unit

C : Celsius(℃)
F : Fahrenheit(℉)

Sheath Out Diameter

32 : Φ3.2	64 : Φ6.4
48 : Φ4.8	80 : Φ8.0

Length

L(mm)

Insert Length

ℓ(mm)

Process Connection

A : R(PT)3/8"	G : R(PT)1/8"
B : G(PF)3/8"	H : G(PF)1/8"
C : R(PT)1/4"	E : R(PT)1/2"
D : G(PF)1/4"	Q : G(PF)1/2"

Material of Protection Tube

A : STS316	D : Titanium
B : STS316L	E : Monel
C : STS304	

Electrical Connection

P : Connector
I : DIN Connector
H : Head

Sensys SENSOR SYSTEM TECHNOLOGY CO., LTD.
ADD : Rm.5010, Ansan Digital Park, 81, Neungan-ro,
Danwon-gu, Ansan-si, Gyeonggi-do, Korea.
TEL : 82-31-310-8910~9
FAX : 82-31-310-8920
http://www.sensys.co.kr
e-mail : master@sensys.co.kr

· Specifications are subject to change without notice.

Copyright © 2012 SENSOR SYSTEM TECHNOLOGY CO., LTD.(20120131)