Patented

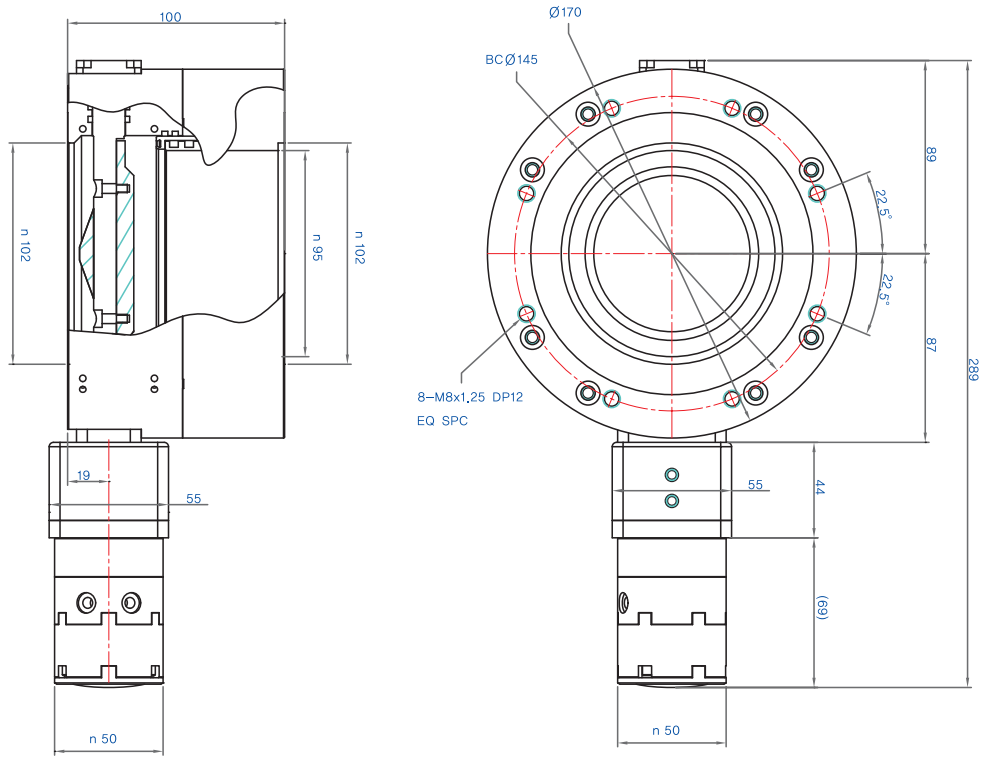

SIZE : ISO-63, 80, 100(Custom sizes available)

Dimensions Sample

Specifications

Pressure range		1 X 10^{-7}mbar to 1.5bar
Leak rate : body, seat		〈 1 X 10^{-8}mbar.ℓ/s
Differential pressure on the gate		≤ 1.5 bar in either direction
Material	Valve body	AL6061
	Valve cylinder	AL6061
	Valve actuator	SS304, AL6061
Seal Materials		FKM(VITON)
Temperature	Valve body	120° C
	Valve actuator	80° C
Operation		Double acting
Cycle until first service		500,000
Position sensor		SMC(D-A93)

PRESYS Company specification and/or test data may not be copied, reproduced or referenced without express written permission of PRESYS.

