DOOSAN

Optimal Solutions for the Future

DMP 500/2SP



2-spindle vertical machining center for high productivity

DMP 500/2SP

ver. EN 160502 SU

Basic structure

Designed as a highly stable, rigid structure, the DMP 500/2SP is suitable for mass production in small variety items. In addition, W-axis has been adopted as a standard feature to adjust tool length both spindles easily.

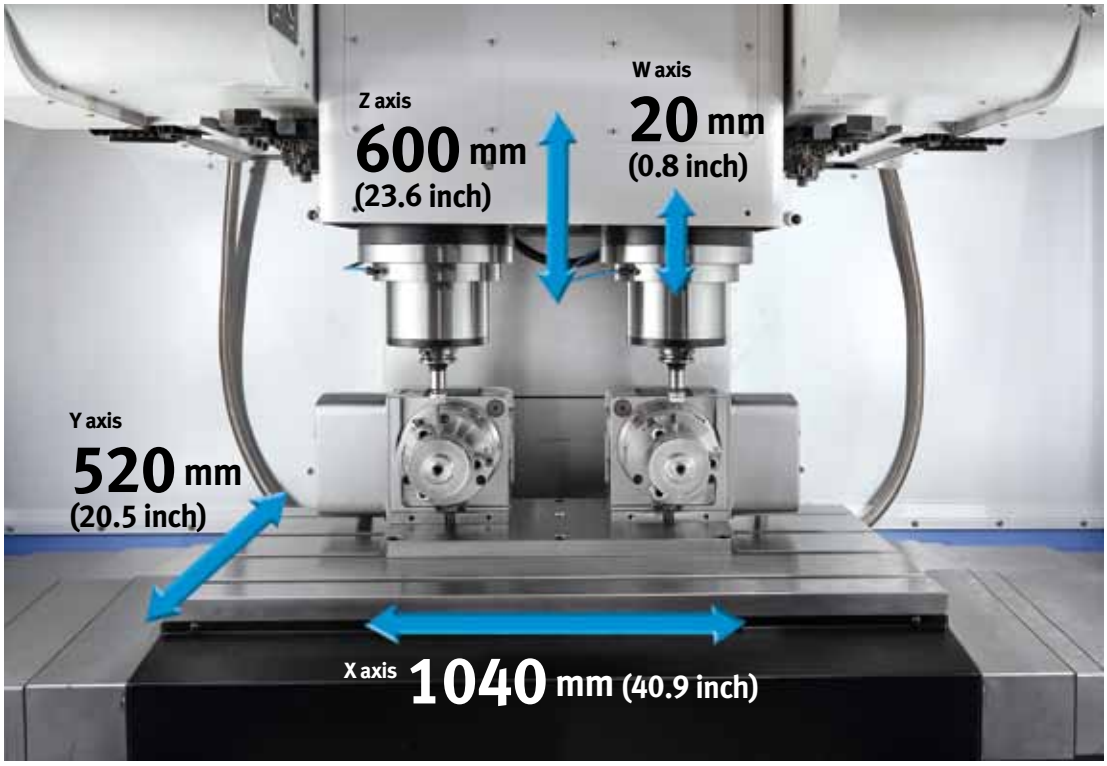

Axis system

Roller-type LM Guides are provided as a standard feature to enhance the rigidity.

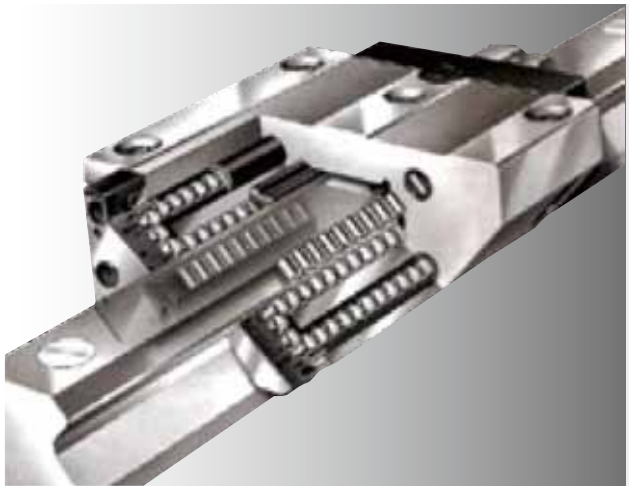

Rapid traverse rate

X axis 40 m/min
(1574.8 ipm)

Y axis 40 m/min
(1574.8 ipm)

Z axis 36 m/min
(1417.3 ipm)

Table

Optimized table size and load capacity are included to install various fixtures in its class.

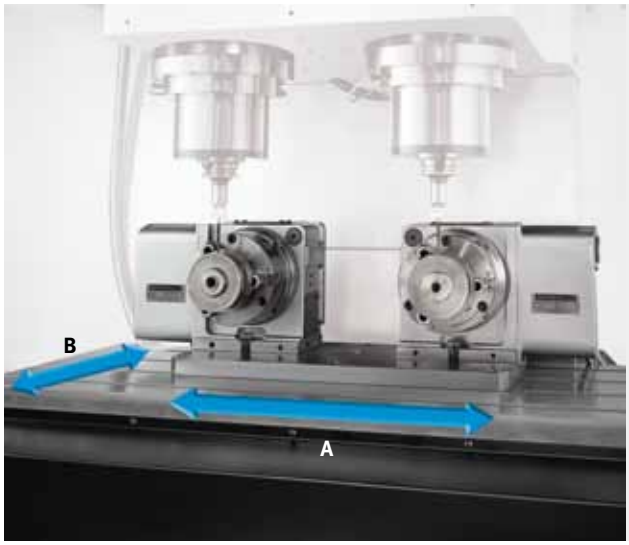

Table loading capacity

800 kg (1763.7 lb)

Table size (A x B)

1200 x 520 mm

(47.2 x 20.5 inch)

Spindle

Direct-coupled type spindles have been adopted as a standard feature to further reduce vibration and noise while enhancing productivity, work environment and machining accuracy.

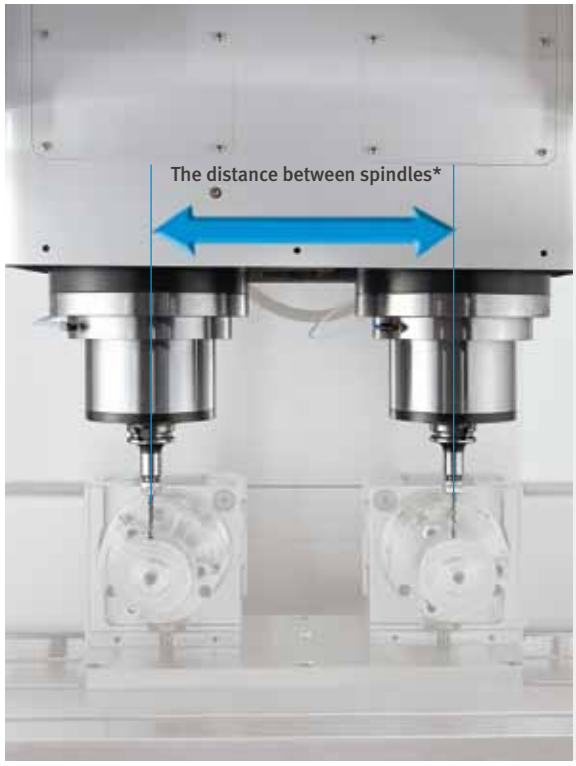

Max. spindle speed

12000 r/min

Max. spindle power (15 min/cont.)

18.5/11 kW
(24.8 / 14.8 Hp)

Max. spindle torque

118 N·m (86.9 lbf·ft)

The distance between spindles

400 mm (15.7 inch)

* Please contact us for further details of different distance between spindles.

Tool change system

For productivity, 2 tool change systems are adopted as a standard feature. The highly-reliable tool magazine can accommodate up to 30 tools as an option.



Tool to Tool time

1.7 s

Tool storage capacity

2-24 ea

2-30 ea option

Max. tool diameter (cont.)

Ø 95 mm (Ø 3.7 inch)

Max. tool length

300 mm (11.8 inch)

Max. tool weight

8 kg (17.6 lb)

Major specifications

DMP 500/2SP

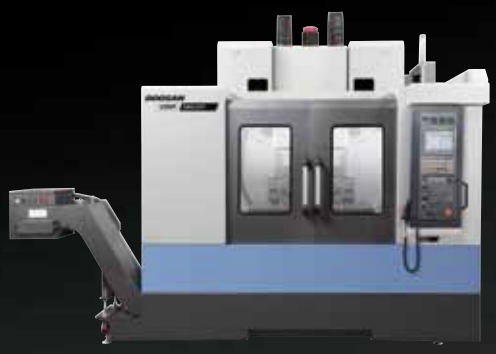

Description	Unit	DMP 500/2SP
Max. spindle speed	r/min	12000
Max. spindle power (15 min. / cont.)	kW(Hp)	18.5(24.8) / 11(14.8)
Max. spindle torque	N·m(lbf·ft)	118 (86.9)
Tool taper	-	ISO #40
Travel distance (X / Y / Z / W)	mm(inch)	1040 / 520 / 600 / 20 (40.9 / 20.5 / 23.6 / 0.8)
Tool stroage capa.	ea	2-24 {2-30}
Table size	mm(inch)	1200 x 520 (47.2 x 20.5)
Machine dimensions (Width x Length x Height)	mm(inch)	2760 x 2353 x 3510 (108.7 x 92.6 x 138.2)
Machine weight	kg(lb)	8500 (18739.3)
NC system	-	DOOSAN FANUC i

{ } Option

Doosan Machine Tools

http://www.doosanmachinetools.com
www.facebook.com/doosanmachinetools

Optimal Solutions for the Future

Head Office
Yeonkang Bldg., 6th FL., 270, Yeonji-dong,
Jongno-gu, Seoul, Korea
Tel +82-2-3670-5345 / 5362
Fax +82-2-3670-5382

Doosan Machine Tools China
Room 101,201,301, Building 39 Xinzhuan Highway
No.258 Songjiang District,China Shanghai(201612)
Tel +86 21-5445-1155
Fax +86 21-6405-1472

Doosan Machine Tools Japan
#2412, Mita Kokusai Bldg. 1-4-28 Mita,
Minato-ku, Tokyo 108-0073, Japan
Tel +81 3 5730 9013
Fax +81 3 5730 9016

Doosan Machine Tools America
19A Chapin Rd., Pine Brook, NJ 07058, U.S.A.
Tel +1-973-618-2500
Fax +1-973-618-2501

Doosan Machine Tools Europe
Emdener Strasse 24, D-41540 Dormagen, Germany
Tel +49-2133-5067-100
Fax +49-2133-5067-111

Doosan Machine Tools India
106 / 10-11-12, Amruthahalli, Byatarayanapura,
Bellary road, Bangalore-560 092, India
Tel +91-80-4266-0122 / 121 / 100

* For more details, please contact Doosan Machine Tools.
* The specifications and information above-mentioned may be changed without prior notice.
* Doosan Machine Tools Co., Ltd. is a subsidiary of MBK Partners. The trademark DOOSAN is used under a licensing agreement with Doosan Corporation, the registered trademark holder.