CKTA-N(P)30



FEATURES

- 700TV Lines (Color), 750TV Lines(B/W)
- Min. illumination 0.2Lux (Color), 0.1Lux (B/W) @F1.65, 30IRE
- 30x(3.49~104.02mm) optical zoom, 10x digital zoom
- WDR / Day&Night (Auto ICR) / DNR
- 210 Preset, 8 Pattern, 8 Scan, 8 Tour, 15 Privacy Zones
- 4 Sensor Inputs & 1 Relay Output
- 360° Endless Pan, Tilt/ Zoom
- AC24V

OPTION

Heater type : AC24V, 2A / 45W

DIMENSION

Unit : mm

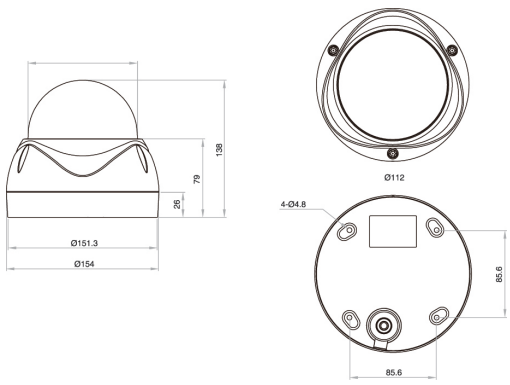

SPECIFICATION

MODEL	CKTA-N30 / CKTA-P30
CAMERA	
Image Sensor	1/4" Sony Double Scan Super HAD CCD II
Effective Pixels	NTSC : 976(H) x 494(V) PAL : 976(H) x 582(V)
Horizontal Res.	Color: 700 TV lines / B/W: 750TV lines
S/N Ratio	50dB (AGC off)
Zoom	30x Optical Zoom and 10x Digital Zoom (Total 300x)
Focal Length	f = 3.49(W) ~ 104.02(T)mm
Min. Illumination	Color: 0.2Lux @F1.65, 30IRE
	B/W: 0.1Lux @F1.65, 30IRE
Day&Night	Auto / Day / Night (ICR)
Focus	Auto / Manual / Semi-Auto
Shutter Speed	NTSC : X2~x512, 1/60~ 1/100,000 sec PAL : X2~x512, 1/50~ 1/100,000 sec
AGC	On/Off (Max. Level Setting)
White Balance	Auto / One Push / Manual / Indoor / Outdoor / ATW
WDR, DNR	On / Off
PAN/TILT	
Range	Pan : 360° (Endless)
	Tilt : 180°(Auto-Flip On) , 90°(Auto-Flip Off)
Pan/Tilt Speed	Preset : 360°/ sec
	Scan : 1°~ 180°/ sec
Preset	210 Position with camera status
Pattern	8 Patterns
Scan	8 Auto Scan include vector scan
Tour	8 Tour (Preset, Pattern, Scan)
GENERAL	
Video Out	CVBS: 1.0 V p-p / 75Ω
Communication	RS-485
Protocol	Auto, Pelco-D, Pelco-P Selectable
Privacy zone	15 zones
Sensor In/Out	Built in 4 Input / 1 Output
OSD	Display camera ID, Title, Mode, and Angle on screen (Multi-Language)
Power	AC24V (±10%) Normal, Built-in Power Line Surge
Approvals	FCC, CE, IP66, ROHS
Operating Temp.	-10°C ~ 50°C / 14°F ~ 122°F
Weight	1.5 Kg
Dimension	Ø154 x 138(H) mm