BNH-TYPE

FEATURES ;

- Accuracy guaranteed to 0.002mm TIR(0.0001").
- Excellent for grinders and CNC lathes.
- Heat-treated point to HRc 60±2.
- Two angular contact bearings for superior performance.
- Anti-friction seal for coolant deflectors and high speed.
- High RPM, up to 6,000.
- Heat-treated body for extra strength, rigidity and long life.



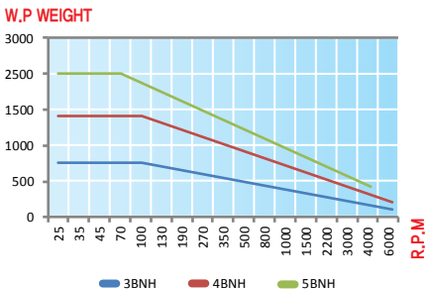

BNH type technical data

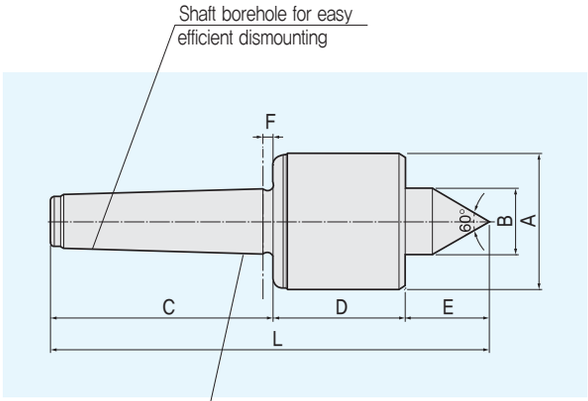

Dimension

Unit : mm, kg

03	1	0	0	MT

MODEL	MT	A	B	C	D	E	F	L	W.P Weight	Max, R.P.M	Weight	Max, Run Out
031003	3	50	22	85	51.5	26	4.5	162.5	750	6,000	1.8	0.002
031004	4	66	32	108	64	41	5.3	213	1,400	6,000	2.2	0.002
031005	5	80	40	136	70	41	6.3	247	2,500	5,000	5.2	0.002

BNHC-TYPE

FEATURES ;

- Accuracy guaranteed to 0.002mm TIR(0.0001").
- Excellent for grinders and CNC lathes.
- Heat-treated point to HRc 90±5.
- Two angular contact bearings for superior performance.
- Anti-friction seal for coolant deflectors and high speed.
- High RPM, up to 6,000.
- Heat-treated body for extra strength, rigidity and long life.



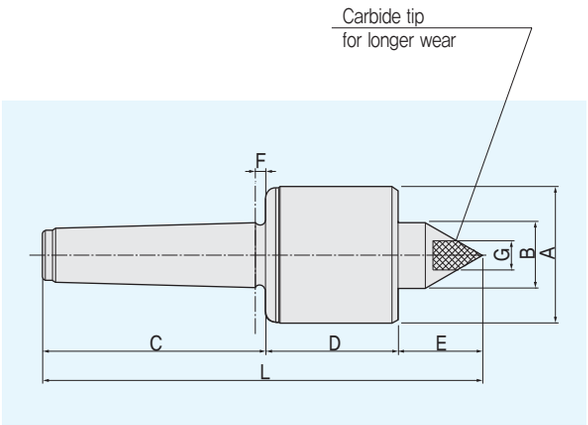

Dimension

03	2	0	0	MT

Unit : mm, kg

MODEL	MT	A	B	C	D	E	F	G	L	W.P Weight	Max, R.P.M	Weight	Max, Run Out
032003	3	50	22	85	51.5	26	4.5	10	162.5	750	6,000	1.8	0.002
032004	4	66	32	108	64	41	5.3	14	213	1,400	6,000	2.2	0.002
032005	5	80	40	136	70	41	6.3	18	247	2,500	5,000	5.2	0.002

BNHL30-TYPE

FEATURES ;

- Accuracy guaranteed to 0.002mm TIR(0.0001").
- Excellent for grinders and CNC lathes.
- Heat-treated point to HRc 60±2.
- Three angular contact bearings for superior performance.
- Anti-friction seal for coolant deflectors and high speed.
- High RPM, up to 6,000.
- Heat-treated body for extra strength, rigidity and long life.



Available

Carbide Tipped Points

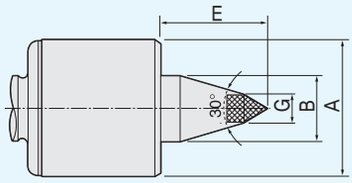

BNHL30C-TYPE

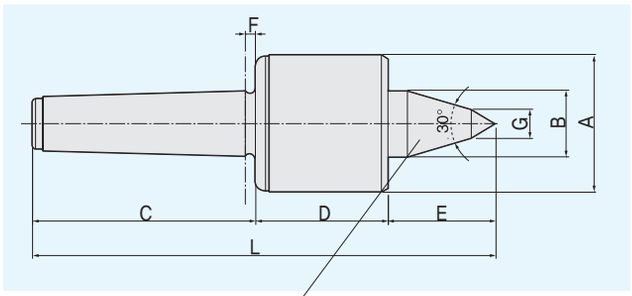

30° point is specially shaped for improved tool clearance

Dimension

03	3	0	0	MT

Unit : mm, kg

MODEL	MT	A	B	C	D	E	F	G	L	W.P Weight	Max, R.P.M	Weight	Max, Run Out
033003	3	50	22	85	51.5	35	4.5	12	171.5	600	6,000	1.9	0.002
033004	4	66	32	108	64	53	5.3	14	225	1,100	6,000	2.2	0.002
033005	5	80	40	136	70	65	6.3	16	271	2,000	5,000	5.2	0.002

BNHL30A-TYPE

FEATURES ;

- Accuracy guaranteed to 0.002mm TIR(0.0001").
- Excellent for grinders and CNC lathes.
- Heat-treated point to HRc 60±2.
- Three angular contact bearings for superior performance.
- Anti-friction seal for coolant deflectors and high speed.
- High RPM, up to 6,000.
- Heat-treated body for extra strength, rigidity and long life.

Available

Carbide Tipped Points

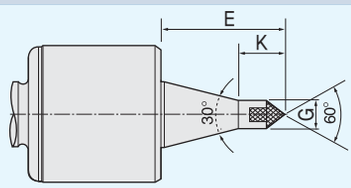

BNHL30AC-TYPE



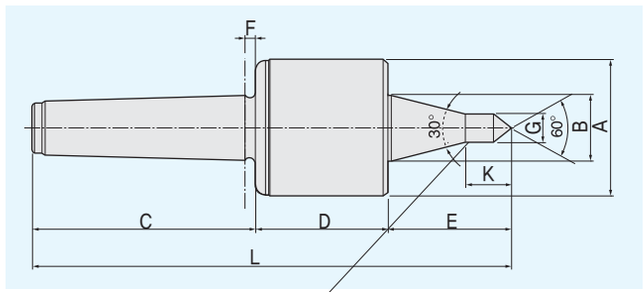

Elongated center point is specially shaped for improved tool clearance(Diagram)

Dimension

03	5	0	0	MT

Unit : mm, kg

MODEL	MT	A	B	C	D	E	F	G	K	L	W.P Weight	Max, R.P.M	Weight	Max, Run Out
035003	3	50	22	85	51.5	50	4.5	10	19	181.5	500	6,000	1.9	0.002
035004	4	66	32	108	64	63.5	5.3	12.5	23.5	235.5	900	6,000	2.2	0.002
035005	5	80	40	136	70	80	6.3	12.5	23.5	286	1,700	5,000	5.2	0.002