DAEHAN SENSOR

Float Type Level Switches with level sensor

DF – Series

Level Switch with contact output

Product Name

DF – 600 (1P – 1T)



INNOBIZ

ISO 9001 인증업체

1993 DAEHAN SENSOR CO., LTD.
All rights reserved

Table of Contents

1. Introduction 3

2. Features 3

3. Specification 3

4. Installation 4

5. Calibration & Setting 4

6. Wiring Connection 5

7. Check Point Before A/S 6

Media : Only Liquid

Wiring : 5-wire type (input/output)

Range : Minimum - 500mm (19.68 inch)
Maximum - 6000mm (236.22 inch)

Input Voltage : DC 0V ~ 24V

Contact Rating : Max. 1A

Output Signal : 4 Point (N/O, N/C)

Temperature : A.M.B

Pressure : A.T.M

Material : Head Housing - Nylon or A.B.S
Stem - Tefron
Socket & Flange - Tefron
Float - Tefron
Stopper - Tefron

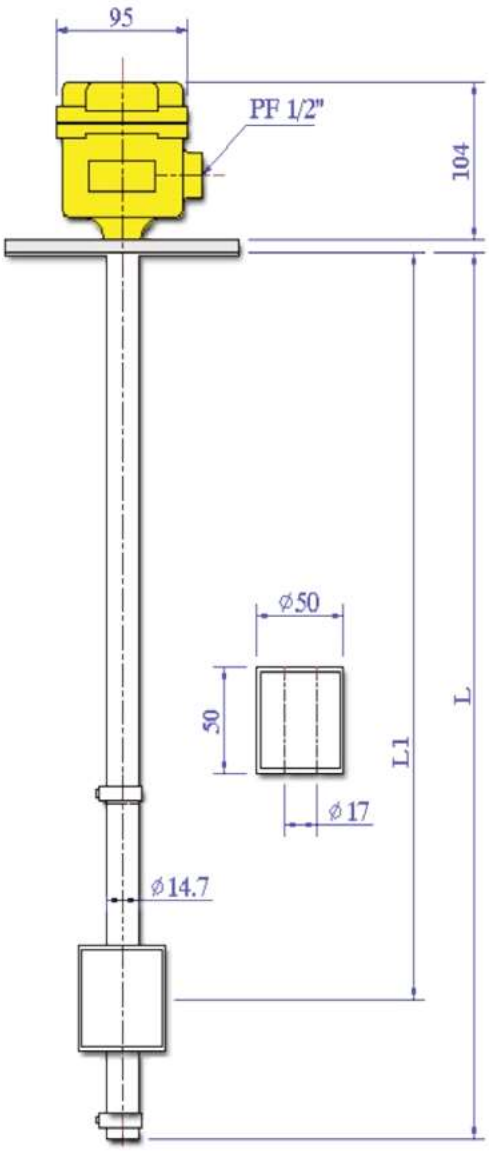

Introduction

Reed switch in the sensor operates as the float moves up and down in which a permanent magnet installed.
This is a level switch using on/off signal from the relay.

Features

This sensor is for indicating liquid level and alarming to control.

It is easy to install so that generally used. It is able to use in chemical, industrial waste water,

food/beverage tank, fuel tank, and etc.

◎ Cautions ◎

Check the suiability between sensor specification and where to install.
Should not adjust the setting of the converter inside sensor.
Suggest to use a protetion pipe when suspened solid exist in the tank.
Should not use for a liquid adhesive.
Should not alter the location of sensor's Stopper.
Be cautions not to bend sensor.
Do not impact on Sensor.

Installation

As shown in the picture, it is installed and using.

Check if the flanges specification match between Tank and product.

Insert a float and stem into the tank and make sure that it is installed vertically right.

Connect wiring between sensor contact terminals and controller.

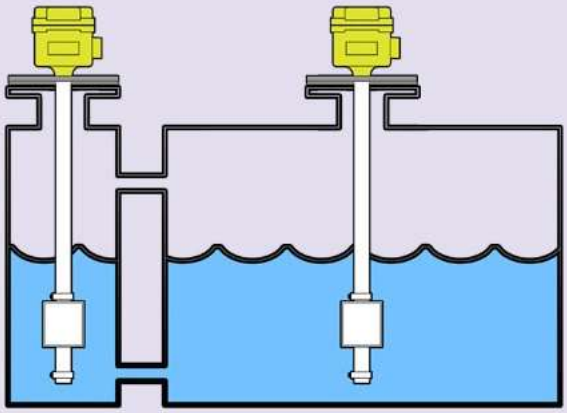

◎ Installation Caution ◎

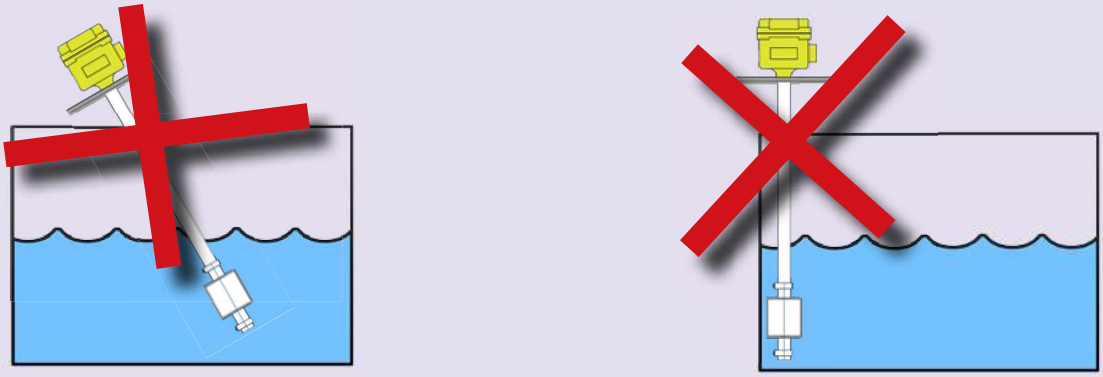

Install the sensor so that it is perpendicular.
Float of the sensor does not touch the wall of the tank.

Calibration

DF-Series sensor is custom-made sensor.

It is determined that contact output location and direction when it is manufactured.

If you need to change, please contact us.

There is no way for you to alter setting.

Wiring Connection

Wiring to a Daehansensor Controller

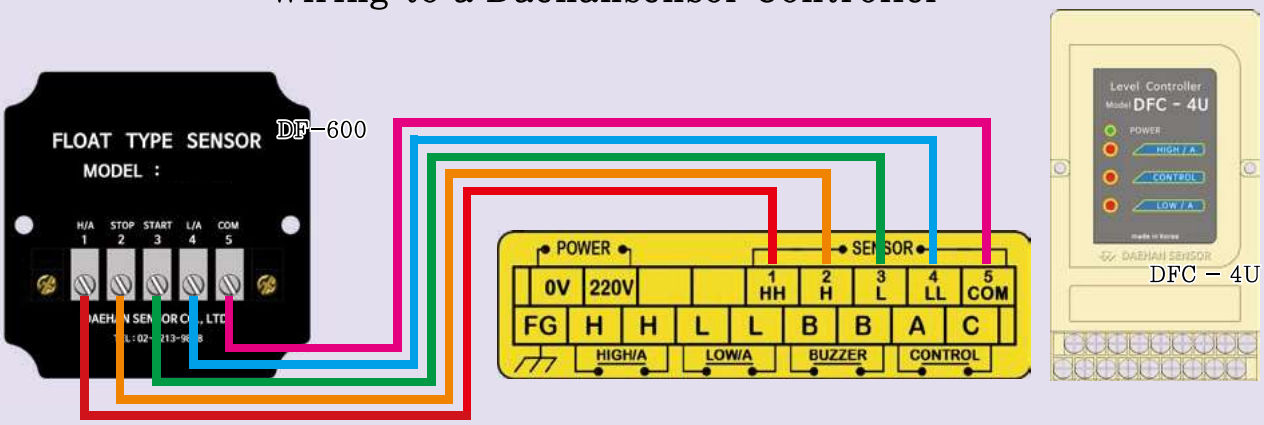

Wiring to a General Operation Control

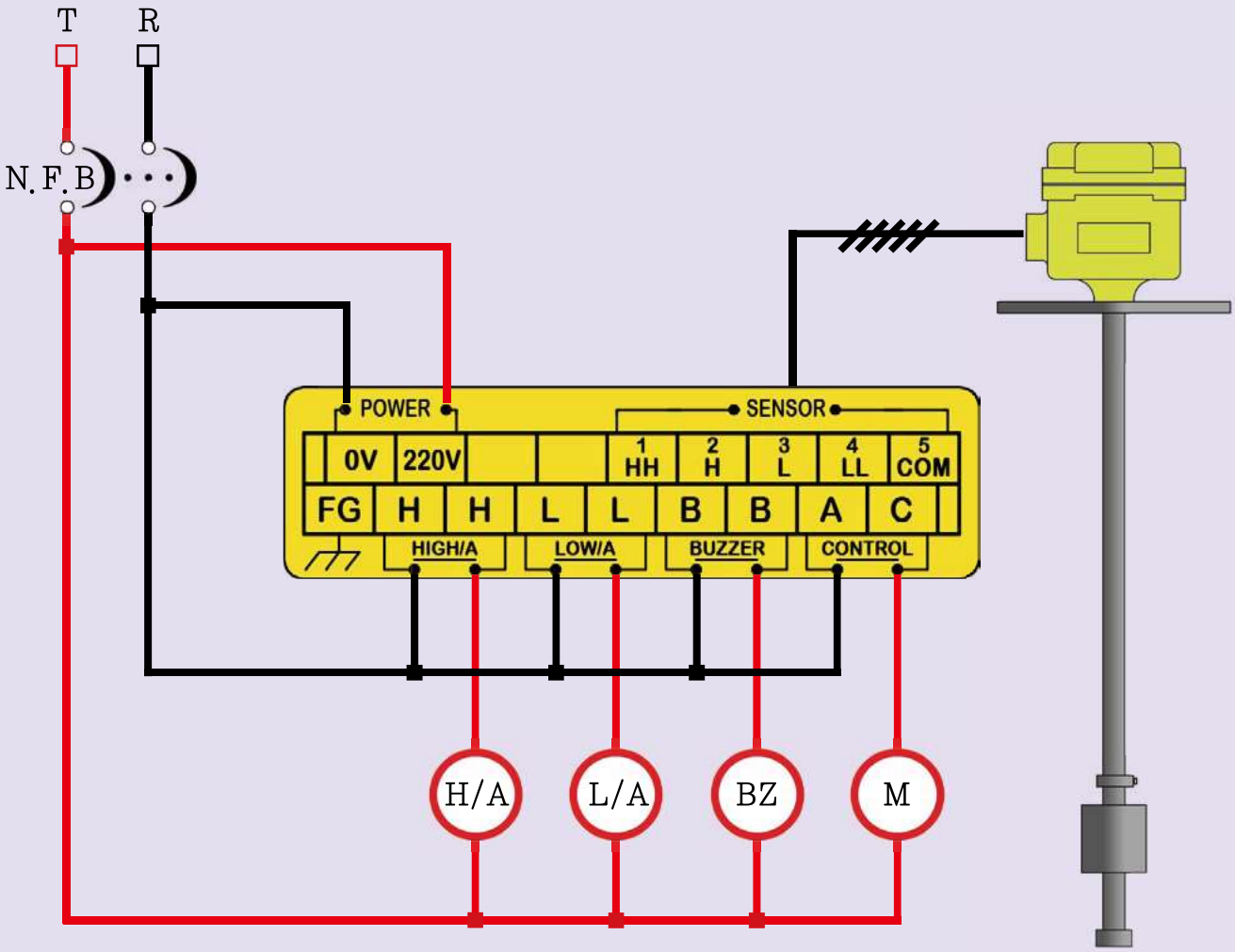

Check & A/S

The output signal is normal?
: Check if the output signals at certain contact points are normal.

The wiring is correct?
: Check the connect the wire short-circuit and / or poor contact.

The state of sensor, float, stopper (inside and outside) is normal?
: Check if water or liquid exists inside of the sensor.

Head Office
94-2, Yongdap-dong, Seongdong-gu, Seoul, Korea

R&D Office
2-71, Jeonong-dong, Dongdaemun-gu, Seoul, Korea

Tel : 02-2213-9888(代) Fax : 02-2245-3482
e.mail : master@dh34.com Domain : www.dh34.com