# DAEHAN SENSOR

## Digital Liquid Indicate
with level controller

## DFI – Series
Level Indicator

## Product Name
DFI – 24VN




INNOBIZ

ISO 9001

ISO 9001 인증업체

1993 DAEHAN SENSOR CO., LTD.
All rights reserved

# Table of Contents

1. Introduction ..... 3

2. Specification ..... 3

3. Dimensiosns ..... 4

4. Wiring Connection ..... 5

5. Display Operation ..... 6

6. Check Point Before A/S ..... 6

# Introduction

This DFI-24VN Series Level Controller gets 4-20mA current signal output from the sensor installed in the tank and displays the level of the liquid in the tank as percentage (0~100%) at 0.5 unit.

It is very much easy to install and able to monitor the status at site without using meter.

It is easy to read the values even in dark place or long distance for a 3-digit 7-segment LED is installed on the front panel.

# Specification

- ▶ Display ---------- 5-Digit 8.0mm(0.315-inch) High 7-segment L.E.D
- ▶ Display update Rate ---------- 0.25 seconds
- ▶ Transducer Supply ---------- 24VDC 250m
- ▶ Operating Temperature ---------- 0℃ ~ 60℃
- ▶ Dimensions ---------- 52mm (Wide) x 84mm (High) x 122mm (Deep)
- ▶ Material ---------- Polycabonate & A.B.S
- ▶ Resolution ---------- 8bit
- ▶ Accuracy ---------- Less then 0.5%
- ▶ Isolation ---------- Non – isolated
- ▶ Max. Load ---------- 500Ω Ohms internally powered

# Dimensions

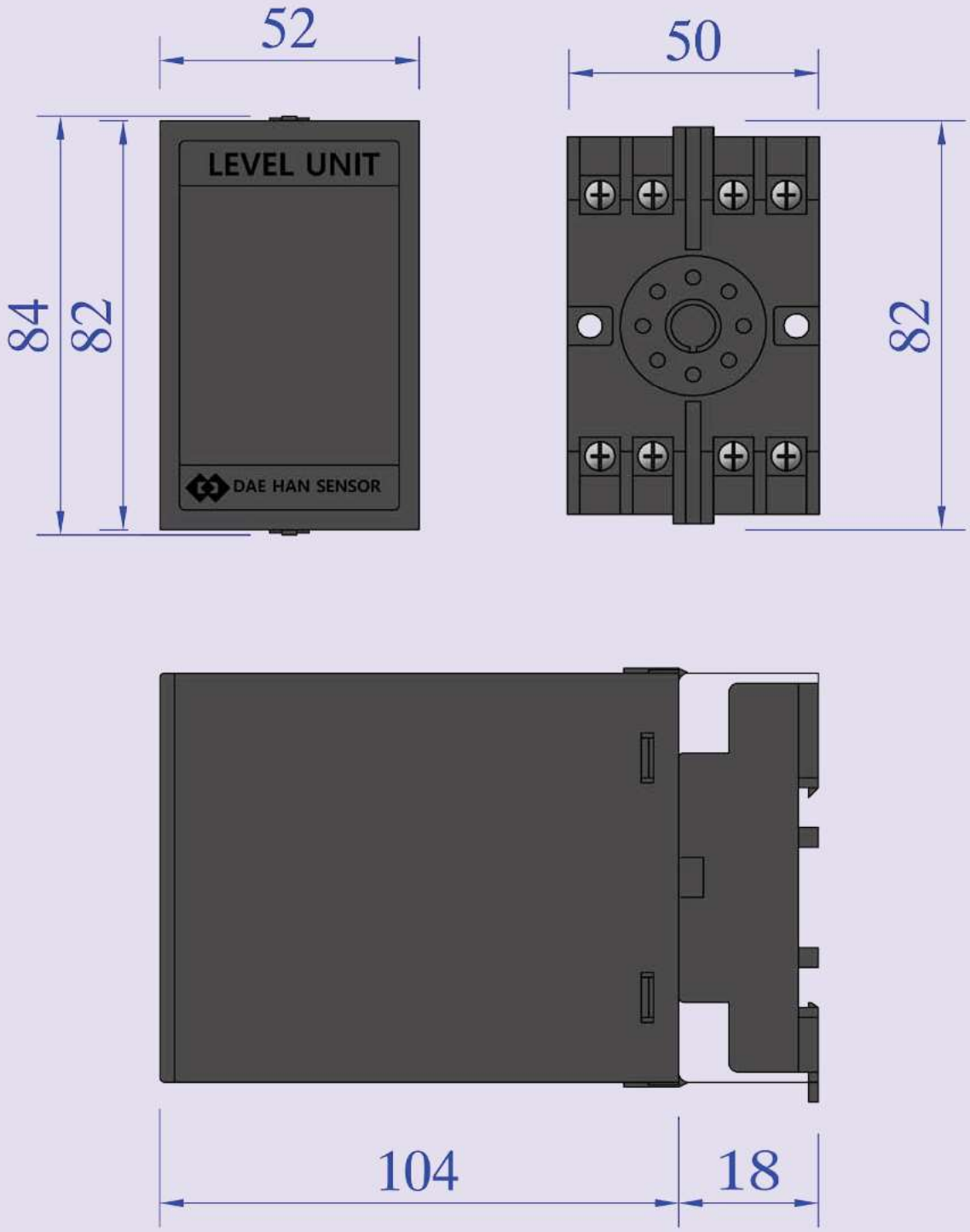

# Wiring Connection

## Wiring to a [Two Wire – Current Loop]

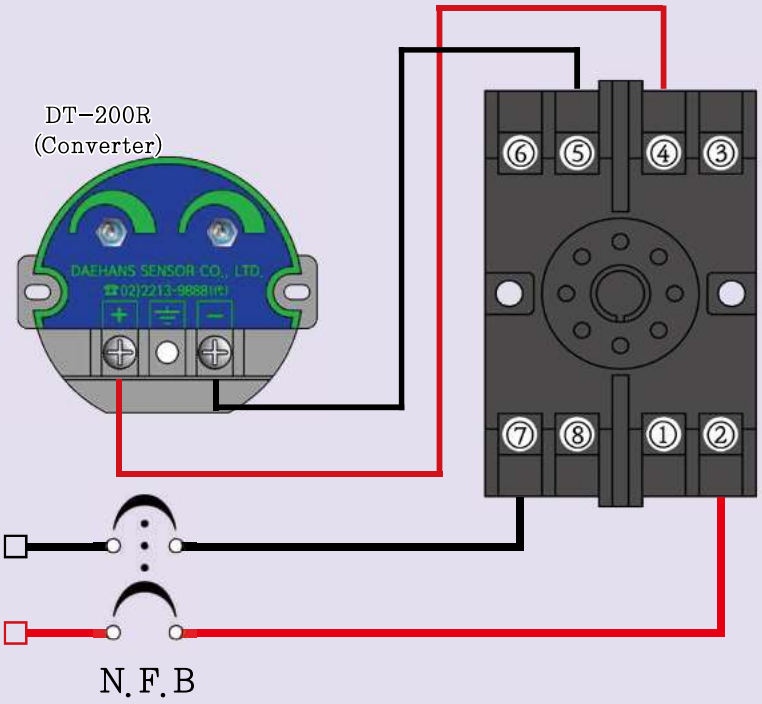


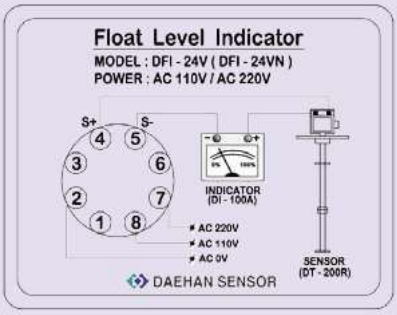


Terminal – Features & description

## Indicator Connection

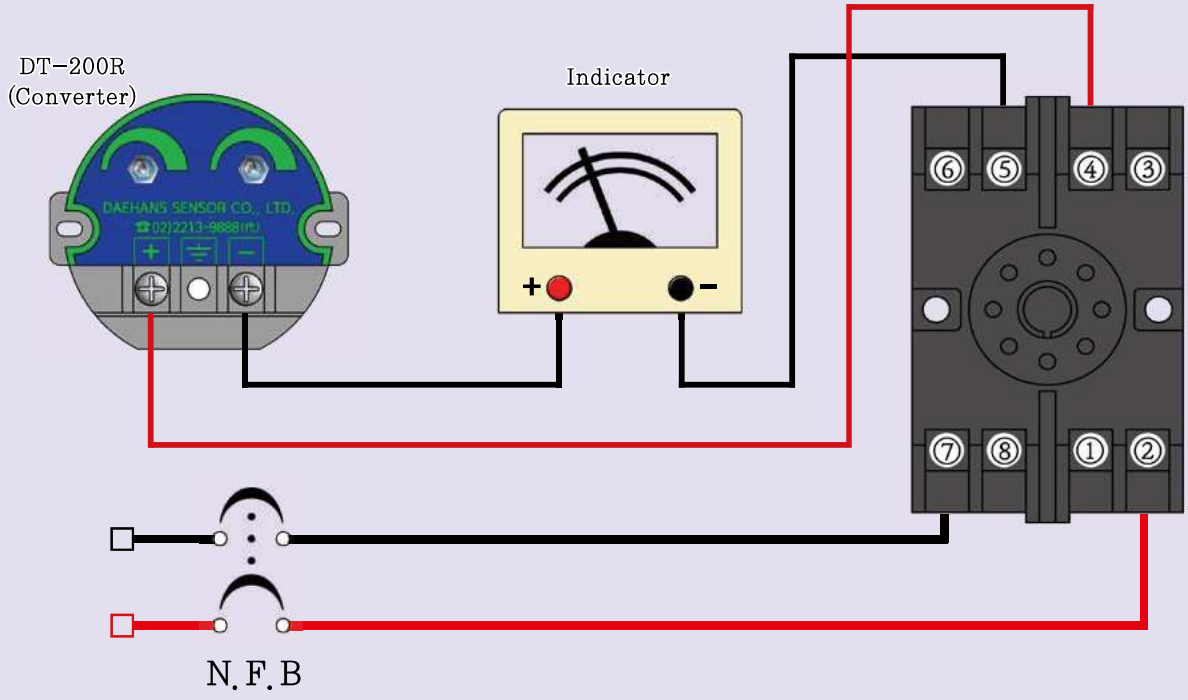

## Display Operation

1. If the setting is not correct or in case of malfuction, 'Error' message displays.
   And the message is as below.

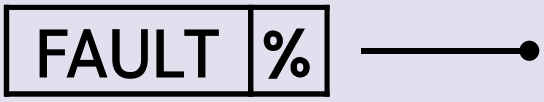


Input Error
This message displays when the output from the sensor does not input to the DFI-24VN controller.

## Check & A/S

If you find any abnormal system during operation, please try to check below points.

1. Is the power connected to AC110V or AC220V correctly?
2. Is the wiring to the sensor made correctly?
3. Is the contact with the relay built up through correct sequence?
4. Is the current input from the sensor correct?
5. Is there any malfuction around the unit?

If the trouble still exists, please kindly contact below.

* Installation and operation manual is subject to change without prior notice for quality improvement.

Head Office
94-2, Yongdap-dong, Seongdong-gu, Seoul, Korea

R&D Office
2-71, Jeonong-dong, Dongdaemun-gu, Seoul, Korea

Tel : 02-2213-9888(代) Fax : 02-2245-3482
e.mail : master@dh34.com Domain : www.dh34.com