# Fluorescent Vaportight Lighting Fixtures
# VDFL(S) Series

# Weatherproof Type
# NEMA 4, 4X, 7



VDFL(S) 36W>

## ❖ Application

VDFL(S) Series Fluorescent lighting fixtures are used ;

- in installations where moisture, dirt, dust, vibration, corrosion and rough usage are problems.

## ❖ Standard Materials

- Body : Glass fiber polyester
- Globe : Polycarbonate
- Inner Reflector : High purity aluminium

## ❖ Features

- Simple construction of enclosures.
- Safety operation and ease of maintenance.
- With the electronic ballast or Inductive ballast to be high power factor, and integral emergency light.
- With folding protective bowl of polycarbonate without wire guard for the most efficient light distribution.
- To open cover, insert tool (8mm Hex Wrench or 13mm Socket Wrench) in key hole and turn right or left 90° as below figure.
- For single- and two-pin fluorescent lamps
- All-pole disconnection via N/C switch when opening cover or battery enclosure.
- Maintained emergency operation 1.5h or 3h

## ❖ Compliance

- IP55 / IP65 (BOTH AVAILABLE)

## ❖ Standard Finish

- Natural
- If you want another color, contact us please.

## ❖ Technical Data

| Electrical Rating | | | |
|---|---|---|---|
| Rated Voltage | AC110V/ 220V/ 240V | | |
| Rated Wattage | 18W/ 18W×2/ 20W/ 20W×2/ 32W/ 32W×2/ 36W/ 36W×2/ | | |
| Battery | 7Ah NiCd-Battery | | |
| Emergency light operation time | | 1.5h | 3h |
| Emergency light power | 18W | 90% | 45% |
| | 36W | 45% | 25% |
| Entry Size | 1/2", 3/4", 1" | | |

## ❖ Weight

| Catalog No. | Weight |
|---|---|
| VDFL(S) 31212 | 5 Kg |
| VDFL(S) 31252 | 8 Kg |

⇨ If you need more information, contact us please

Copyright by NAMBUK Electric Co., LTD. 2004

# Lighting Fixture

## ❖ Ordering Number

| Lamp | Watt(W) | Voltage(V) | Catalog Number |
|---|---|---|---|
| Fluorescent Lamp | 18W×1 | 110 | VDFL(S) 31111 |
| | | 220 | VDFL(S) 31211 |
| | 18W×2 | 110 | VDFL(S) 31112 |
| | | 220 | VDFL(S) 31212 |
| | 32W×1 | 110 | VDFL(S) 31131 |
| | | 220 | VDFL(S) 31231 |
| | 32W×2 | 110 | VDFL(S) 31132 |
| | | 220 | VDFL(S) 31232 |
| | 36W×1 | 110 | VDFL(S) 31151 |
| | | 220 | VDFL(S) 31251 |
| | 36W×2 | 110 | VDFL(S) 31152 |
| | | 220 | VDFL(S) 31252 |

## ❖ Ordering Information

VDFL(S) 3 1 1 4 1
① ② ③ ④ ⑤ ⑥

① Lighting Fixture Type
VDFL(S) Fluorescent Lighting Fixture

② Ballast Type
3 – Internal Ballast
4 – Emergency Type

③ Mounting Type

④ Voltage (V)
1 – 110
2 – 220
3 – 230
4 – 240

⑤ Lamp Wattage (W)
1 – 18
2 – 20
3 – 32
4 – 40
5 – 36

⑥ Quantity of Lamp
1 – ×1
2 – ×2

## ❖ Photometric Data

<VDFL(S) 31252>

+Lamp : FL36×2
(2×2500 lm)
+With globe and guard

☞right picture explanation
+Blue : Normal to Lamp
+Red : Parallel to Lamp

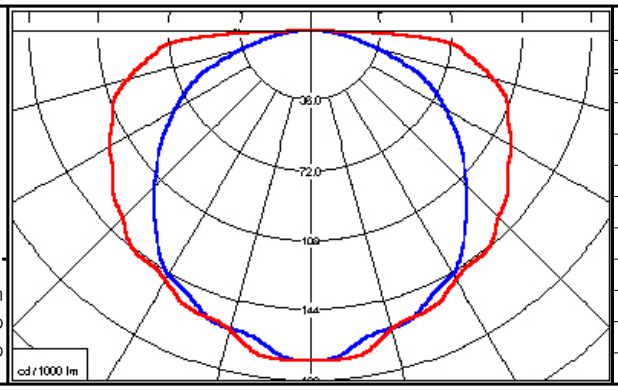


| 0°–180°(Blue) | | 90°–270°(Red) | |
|---|---|---|---|
| Angle | cd/1000 lm | Angle | cd/1000 lm |
| 0 | 169 | 0 | 169 |
| 10 | 158 | 10 | 169 |
| 20 | 158 | 20 | 156 |
| 30 | 146 | 30 | 145 |
| 40 | 124 | 40 | 145 |
| 50 | 101 | 50 | 133 |
| 60 | 79 | 60 | 120 |
| 70 | 56 | 70 | 109 |
| 80 | 23 | 80 | 85 |
| 90 | 5 | 90 | 60 |

## ❖ Dimension

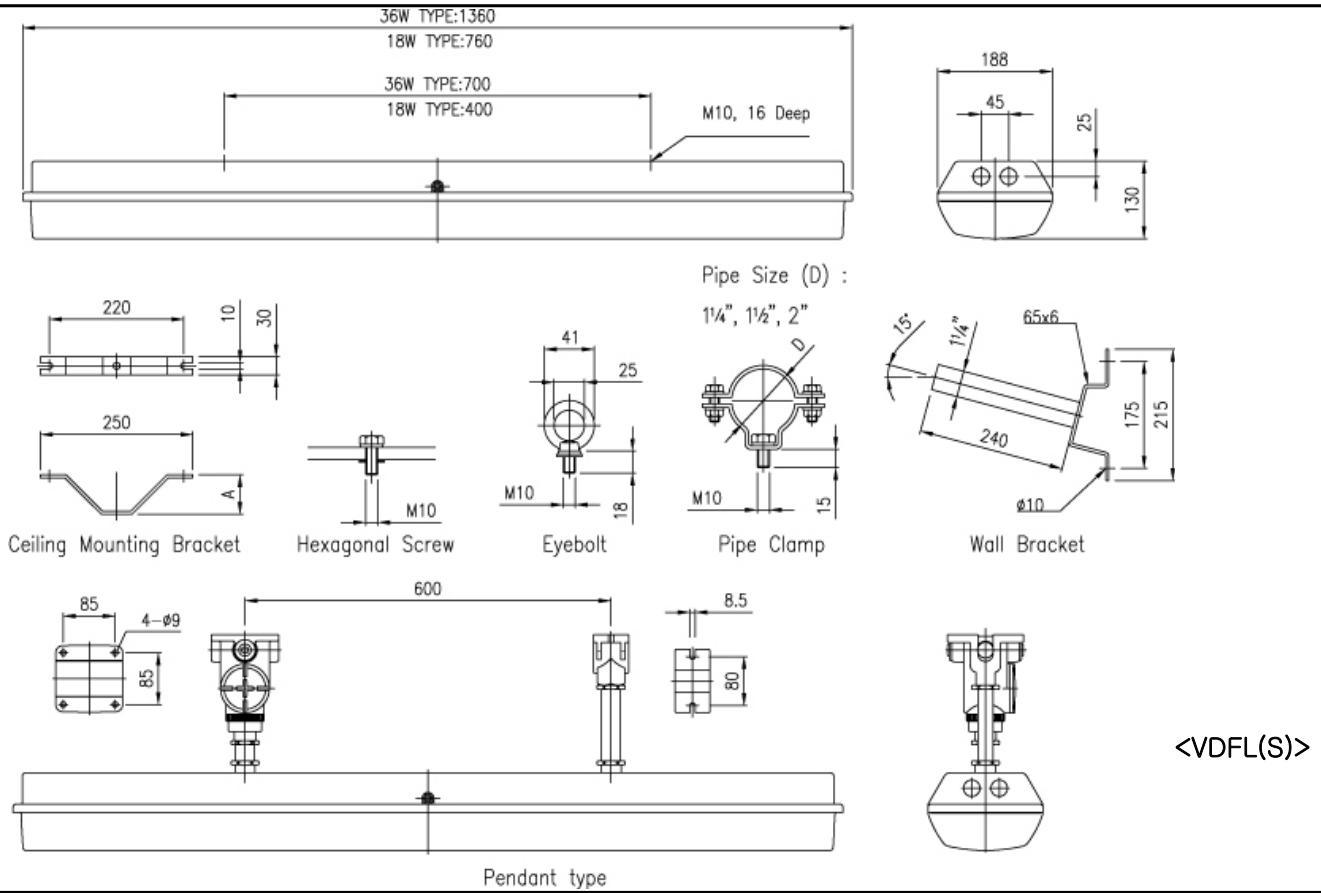


Copyright by NAMBUK Electric Co., LTD. 2004