CRYOGENIC GATE VALVES

BOLTED BONNET

GT CLASS 150

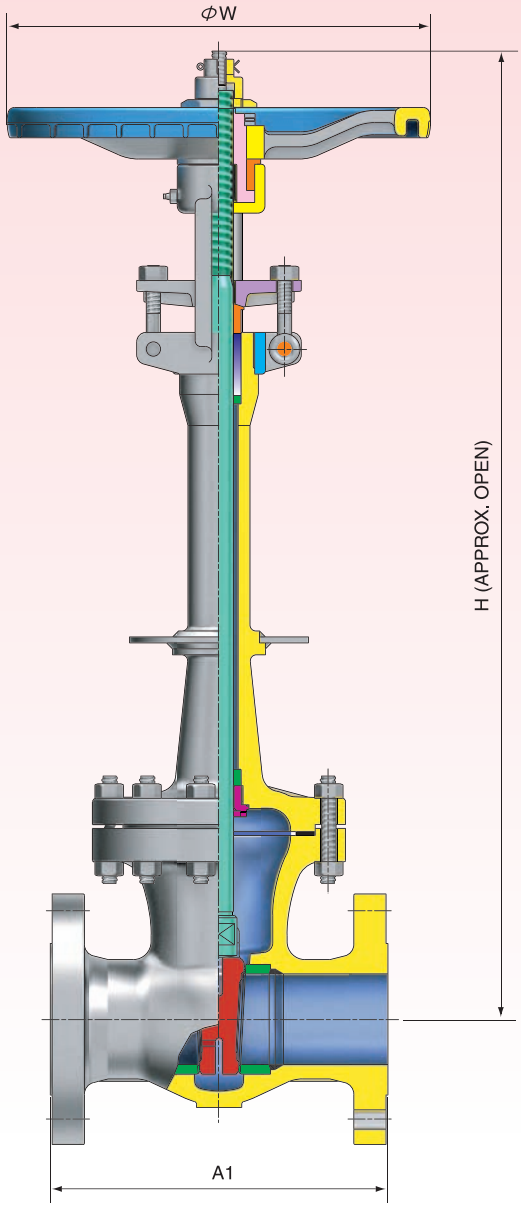

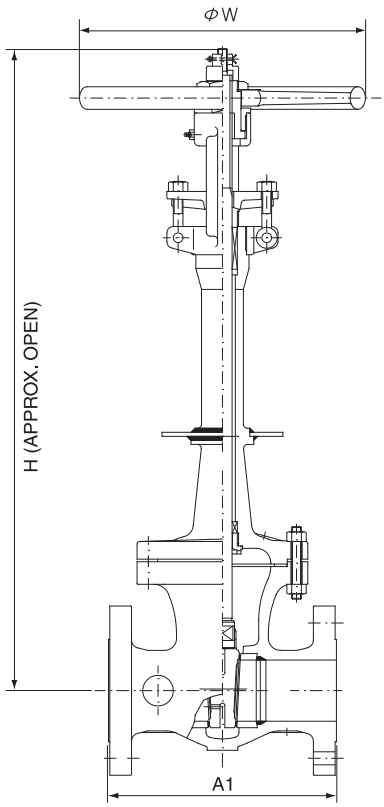

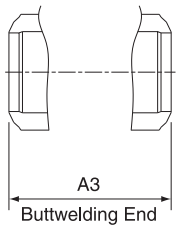

VALVE SIZE		in	2	2.5	3	4	6	8	10	12	14	16	18
		mm	50	65	80	100	150	200	250	300	350	400	450
A1		in	7.0	7.5	8.0	9.0	10.5	11.5	13.0	14.0	15.0	16.0	17.0
		mm	178	190	203	229	267	292	330	356	381	406	432
A3		in	8.5	9.5	11.1	12.0	15.9	16.5	18.0	19.8	22.5	24.0	26.0
		mm	216	241	283	305	403	419	457	502	572	610	660
H		in	29.4	32.5	34.3	37.5	44.4	61.2	67.9	74.3	88.0	97.2	105.0
		mm	748	826	870	953	1127	1554	1725	1887	2234	2469	2666
W		in	9.8	9.8	11.0	11.8	15.7	17.7	23.6	27.2	28.0	28.0	31.5
		mm	250	250	280	300	400	450	600	690	710	710	800
WEIGHT	RF	lb	79.4	92.6	105.8	158.7	291.0	432.1	610.7	903.9	1106.7	1430.8	1977.5
		kg	36	42	48	72	132	196	277	410	502	649	897
	BW	lb	66.1	79.4	88.2	132.3	264.6	379.2	551.2	837.7	1036.2	1344.8	1889.3
		kg	30	36	40	60	120	172	250	380	470	610	857