MacAPI
Power and Signal Connectors



Description
MacArtney's electrical API connectors comply with API standards for deployment in critical and strictly regulated environments. Connectors are thoroughly tested at every stage of production to ensure integrity and functionality underwater.

For the API 17E standard, the PBOF cable is as important as the connector. Every element in the PBOF cable is tested individually before construction to ensure that it is entirely intact and can function even if water ingresses the hose. A boot fitted behind the connector ensures that any water entering the PBOF hose cannot penetrate it and the connector will continue to work for its intended lifespan even fully flooded.

Double test ports on the API connector itself permit pressure testing of both sections after mating and before the connection is lowered into the water.

During production both the cable and connector are pressure tested before completion, and the complete harness cable is pressure tested prior to delivery.
All external parts of the connector assembly are made from stainless steel with an electro polished surface.

Both the CCP and FCR connectors complies with API standard 16D. Together with the cable, the PBOF and connector assembly complies with the 16D and 17E standard.

Features and Benefits
- Designed, tested and approved to the API 17E standard
- Approved to the API 16D standard
- Certified to DNV-OSS-306
- Up to 24 conductor passes
- Full performance even with flooded cable
- FCR able to withstand full open face pressure
- Excellent performance even in harsh marine environments
- Withstands fall back pressure

Applications
- Riser monitoring systems
- Drilling control systems
- Subsea control systems
- Blow out prevention (BOP) systems
- Intervention and workover systems

Specifications
- Voltage rating 600 V
- Current rating 10 A per contact (4 pin connector)
- Current rating 6 A per contact (12 pin connector)
- Current rating 3 A per contact (24 pin connector)
- Depth rating 4000 metres







Specifications

4 pin connector

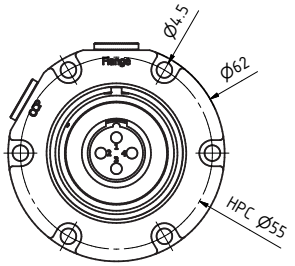

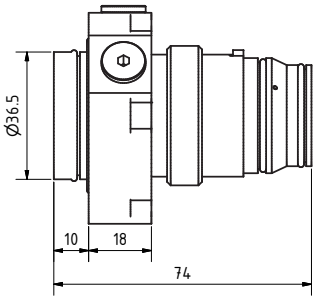

12 pin connector

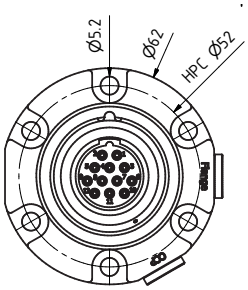

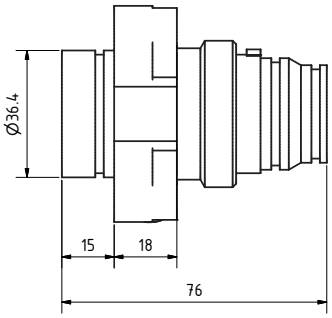

24 pin connector

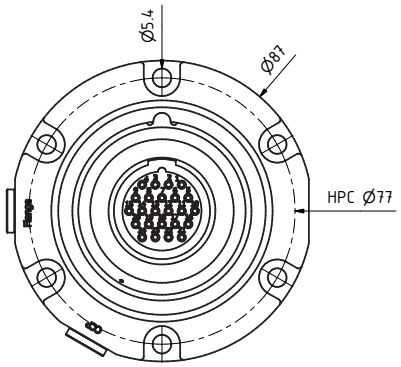

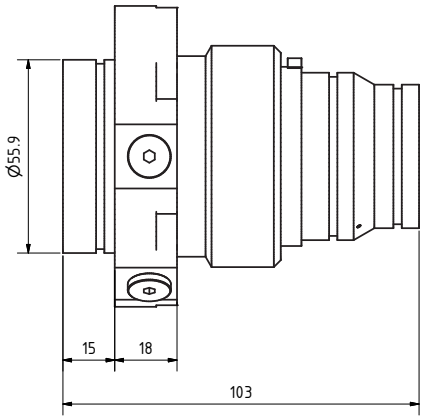

Material

Metal shell housing:	AISI 316
Dummy pressure cap:	AISI 316
Dummy connector:	POM
Electrical insert:	PEEK
O-ring materials:	FPM-75

Connector (4 pin)

Current rating:	10 A per contact (1-4 passes)

Connector (12 pin)

Current rating:	6 A per contact (1-12 passes)

Connector (24 pin)

Current rating:	3 A per contact (1-24 passes)

Connector (4, 12 and 24 pin)

Voltage rating:	600 V
Depth rating:	4000 m
Test port interface:	SAE 3/16”

Certifications

Connector:	Certified according to API 16D, API 17E
Documentation:	In accordance with DNV ISO 9001:2008