Turcon® Glyd Ring® T





Double Acting

Rubber Energized Plastic Faced Seal

Material:
Turcon®, Zurcon® and Elastomer

■ Turcon® Glyd Ring® T*



Description

Turcon® Glyd Ring® T is a further technical development of the Turcon® Glyd Ring® seal which has been successfully used for decades. It is fully interchangeable with the earlier Glyd Ring® seals in all new applications. Glyd Ring® T meets all the market demands for a function-specific seal solution, observing economic and ecological aspects.

The benefits of the patented seal concept are provided by the innovative functional principle of the trapezoidal profile cross-section.

Both lateral profile flanks are inclined so that the seal profile tapers towards the seal surface. The profile can thus retain the robust and compact form typical of piston seals without losing any of the flexibility required to achieve a pressure-related maximum compression (Figure 15).

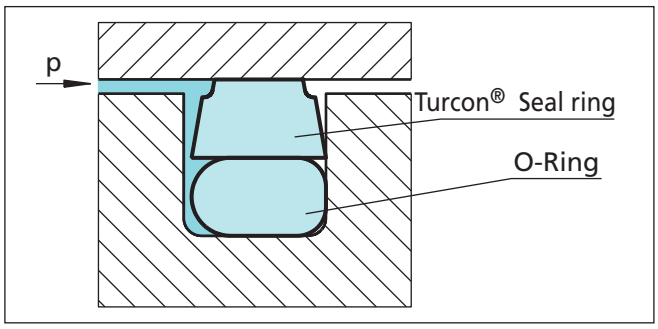

Figure 15 Turcon® Glyd Ring® T

The edge angle created by the special Glyd Ring® T crosssectional form permits an additional degree of freedom and enables a slight tilting movement of the seal. The maximum compression is thus always shifted towards the area of the seal edge directly exposed to the pressure. On the low-pressure edge of the seal, on the other hand, the Glyd Ring® T exhibits only zones with neutral strains without compressive or shearing loads, thus effectively reducing the danger of gap extrusion. The resulting benefits for the user can be seen in the following list.

Advantages

The benefits offered to date by the Glyd Ring® are still retained in full, and are now complemented by a number of further important advantages:

- Very good static leak-tightness
- Increased clearance possible (approx. +50%), depending on the operating conditions
- Due to the larger extrusion gap, safe use even with soiled media
- Low friction, no stick-slip effect
- Simple groove design, one-piece pistons possible
- Installation grooves to ISO 7425/1
- Adaptable to the operating conditions due to a wide range of possible materials (Turcon®, Zurcon®)
- Suitable for new environmentally safe hydraulic fluids
- Available for all cylinder diameters up to 2.700 mm.

Application Examples

The Turcon® Glyd Ring® T is the recommended sealing element for double acting pistons of hydraulic components such as:

- Injection moulding machines
- Machine tools
- Presses
- Excavators
- Forklifts & handling machinery
- Agriculture
- Valves for hydraulic & pneumatic circuits.
- Servo equipment
- Pressure intensifiers
- Jacks

It is particularly recommended for heavy duty and large diameter applications.

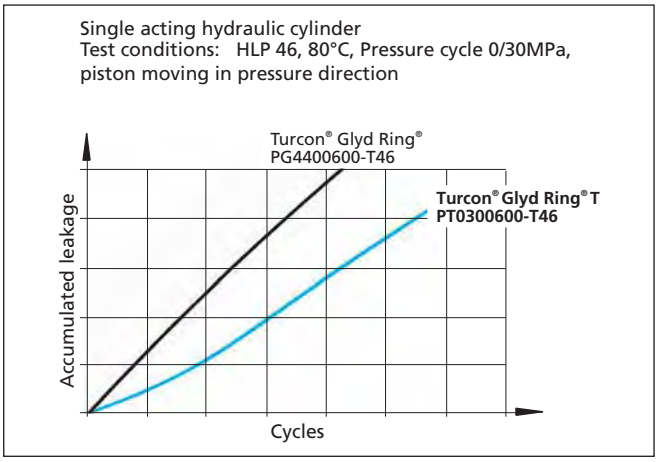

Figure 16 Dynamic leakage Turcon® Glyd Ring® T/ Turcon® Glyd Ring® as single acting piston seal

* Patent No.:
DE 4140833C3
EP 0582593
Japan 2799367
USA 5,433,452

Technical Data

Operating conditions

Pressure:	Up to 60 MPa
Speed:	Up to 15 m/s
Temperature:	-45 °C to +200 °C *) (depending on O-Ring material).
Media:	Mineral oil-based hydraulic fluids, flame retardant hydraulic fluids, environmentally safe hydraulic fluids (bio-oils), phosphate ester, water, air and others, depending on the seal and O-Ring material compatibility (see Table XIII)
Clearance:	The maximum permissible radial clearance s_{max} is shown in Table XIV, as a function of the operating pressure and functional diameter.

Important Note:
The above data are maximum values and cannot be used at the same time. e.g. the maximum operating speed depends on material type, pressure, temperature and gap value. Temperature range also dependent on medium.

*) In the case of unpressurized applications in temperatures below 0°C please contact our application engineers for assistance!

Materials

The following material combinations have proven effective for hydraulic applications:

All round material for hydraulic applications with reciprocating or short stroke in mineral oils, flame retardant hydarulic fluids HFC, phosphate ester, bio-oils or fluids having less satisfactory properties.

Turcon® Glyd Ring® T:	Turcon® M12	
O-Ring:	NBR, 70 Shore A FKM, 70 Shore A	N V
Set code:	M12N or M12V	

For medium to heavy applications with reciprocating movements in mineral oils and other media with good lubrication:

Turcon® Glyd Ring® T:	Turcon® T46	
O-Ring:	NBR, 70 Shore A FKM, 70 Shore A	N V
Set code:	T46N or T46V	

For specific applications, other viable material combinations are listed in Table XIII.

Series

Different cross-section sizes are recommended as a function of the seal diameters.

Table XII, shows the relationship between the series number according to the seal diameter range and the different application class sizes. These application classes are:

Standard application:	General applications in which no exceptional operating conditions exist.
Light application:	Applications with demands for reduced friction or for smaller grooves.
Heavy-duty application:	For exceptional operating loads such as high pressures, pressure peaks, etc.

Table XII Available range

Series No.	Piston Diameter D_N H9
PT00	8.0 - 140.0
PT01	8.0 - 200.0
PT02	16.0 - 380.0
PT03	40.0 - 480.0
PT04	80.0 - 700.0
PT08	133.0 - 999.9
PT05	310.0 - 999.9
PT05X	1000.0 - 1200.0
PT06	750.0 - 999.9
PT06X	1000.0 - 2700.0

For the recommended range see Table XIV.

Table XIII Turcon® and Zurcon® Materials for Glyd Ring® T

Material, Applications, Properties	Code	O-Ring Material Shore A	Code	O-Ring Operating Temp.* °C	Mating Surface Material	MPa max. Dyna-mic
Turcon® M12 **First material choice** for seals in linear motion Overall improved properties For new constructions and updating For all commonly applied hydraulic fluids including fluids with low lubrication performance Lowest friction and best sliding properties Lowest wear on seals Improved absorption of abrasive contaminants No wear or abrasion of counter surface Mineral fibre and Additives filled Colour: Dark grey	M12	NBR - 70	N	-30 to +100	Steel Steel hardened Steel chrome plated (rod) Steel plated (rod) Cast iron Stainless steel Titanium	50
		NBR - 70 Low temp.	T	-45 to +80		
		FKM - 70	V	-10 to +200		
Turcon® T40 For lubricating and non-lubricating fluids High frequency and short strokes **Water hydraulics** Surface texture is not suitable for gas sealing Carbon fibre filled Colour: Grey	T40	NBR - 70	N	-30 to +100	Steel Steel hardened Steel chrome plated (rod) Cast iron Stainless steel Aluminium	25
		NBR - 70 Low temp.	T	-45 to +80		
		FKM - 70	V	-10 to +200		
		EPDM - 70	E**	-45 to +145		
Turcon® T46 For lubricated hydraulics in linear motion High compressive strength High extrusion resistance Very good sliding and wear properties BAM tested Bronze filled Colour: Light to dark brown, which may have variations in shading	T46	NBR - 70	N	-30 to +100	Steel hardened Steel chrome plated (rod) Cast iron	50
		NBR - 70 Low temp.70	T	-45 to +80		
		FKM - 70	V	-10 to +200		
Zurcon® Z51*** For mineral oil based fluids **Very high abrasion and extrusion resistance** For counter surface with rougher surface finish Limited chemical resistance Max. working temperature 110 °C Cast polyurethane Colour: Yellow to light-brown	Z51	NBR - 70	N	-30 to +100	Steel Steel hardened Steel chrome plated (rod) Cast iron Stainless steel Ceramic coating	60
		NBR - 70 Low temp.	T	-45 to +80		
Zurcon® Z80 For lubricating and non-lubricating fluids Water based fluids, air and gases Dry air pneumatics High abrasion and extrusion resistance For service in abrasive conditions and media with particles Good chemical resistance Limited temperature capability (-60 to +80 °C) UHMWPE (Ultra High Molecular Weight Polyethylene) Colour: White to off-white	Z80	NBR - 70	N	-30 to (+100)	Steel Steel hardened Steel chrome plated (rod) Stainless steel Aluminium Ceramic coating	35
		NBR - 70 Low temp.	T	-45 to +80		
		EPDM- 70	E**	-45 to(+145)		

* The O-Ring Operation Temperature is only valid in mineral hydraulic oil (except EPDM). ** Material not suitable for mineral oils.
*** max. Ø 2300 mm BAM: Tested by "Bundesanstalt Materialprüfung, Germany". Highlighted materials are standard.

■ Installation Recommendation

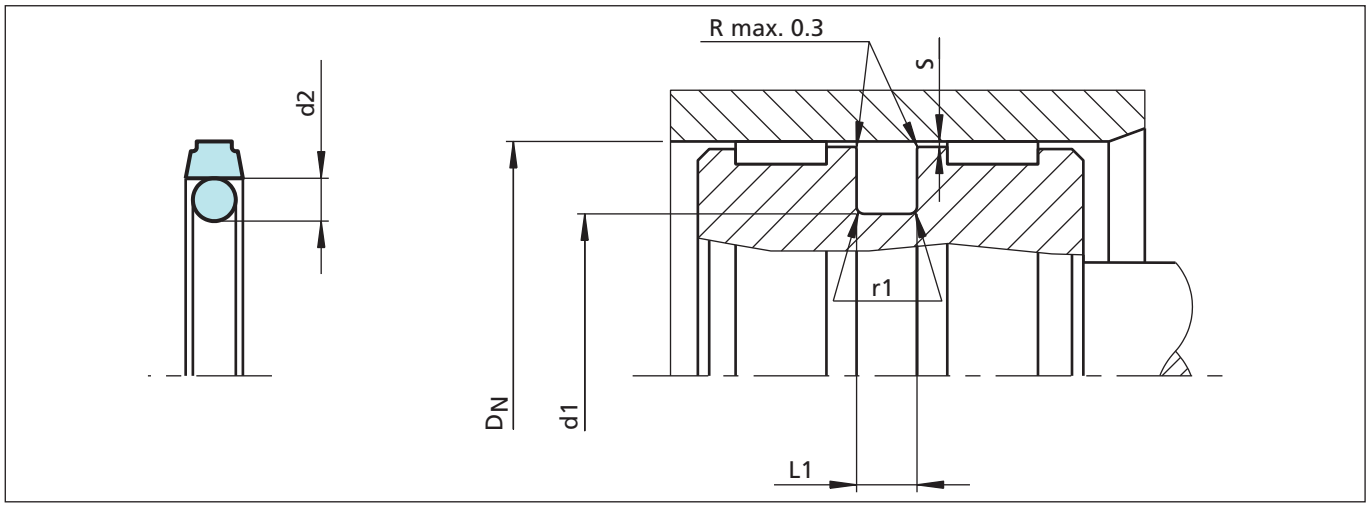

Figure 17 Installation drawing

Table XIV Installation Dimensions – Standard recommendations

Series-No.	Bore Diameter D_N H9			Groove Diameter	Groove Width	Radius	Radial Clearance S max.*			O-Ring Cross-Sec.
	Standard Application	Light Application	Heavy Duty Application	d_1 h9	L_1 +0.2	r_1	10 MPa	20 MPa	40 MPa	d_2
PT00	8 - 14.9	15 - 39.9	--	D_N - 4.9	2.2	0.4	0.40	0.30	0.20	1.78
PT01	15 - 39.9	40 - 79.9	--	D_N - 7.5	3.2	0.6	0.60	0.50	0.30	2.62
PT02	40 - 79.9	80 - 132.9	15 - 39.9	D_N - 11.0	4.2	1.0	0.70	0.50	0.30	3.53
PT03	80 - 132.9	133 - 329.9	40 - 79.9	D_N - 15.5	6.3	1.3	0.80	0.60	0.40	5.33
PT04	133 - 329.9	330 - 669.9	80 - 132.9	D_N - 21.0	8.1	1.8	0.80	0.60	0.40	7.00
PT08	330 - 669.9	670 - 999.9	133 - 329.9	D_N - 24.5	8.1	1.8	0.90	0.70	0.50	7.00
PT05	670 - 999.9	--	310 - 669.9	D_N - 28.0	9.5	2.5	1.00	0.80	0.60	8.40
PT05X	--	1000 - 1200	--	D_N - 28.0	9.5	2.5	1.00	0.80	0.60	8.40
PT06**	--	--	670 - 999.9	D_N - 38.0	13.8	3.0	1.20	0.90	0.70	12.00
PT06X**	1000 - 2700	--	--	D_N - 38.0	13.8	3.0	1.20	0.90	0.70	12.00

* At pressures **> 40 MPa** use diameter tolerance H8/f8 (bore/piston) in area of the seal or consult TSS for alternative material or profiles. TSS Slydring® / Wear Rings are not applicable at very small radical clearance S. Please consult the Slydring® catalog.
** O-Rings with 12 mm cross section are delivered as special profilring.

Ordering example

Turcon® Glyd Ring® T, complete with O-Ring, standard application, series PT03 (from Table XIV).
Bore diameter: D_N = 80.0 mm
TSS Part No.: PT0300800 (from Table XV)

Select the material from Table XIII. The corresponding code numbers are appended to the TSS Part No. (from Table XV). Together they form the TSS Article No.
For all intermediate sizes not shown in Table XV, the TSS Article No. can be determined from the example opposite.

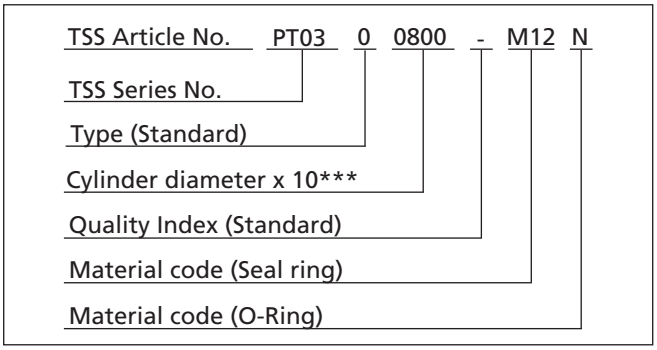

*** For diameters ≥ 1000.0 mm multiply only by factor 1.
Example: PT06 for diameter 1200.0 mm.
TSS Article No.: PT06**X1200** - M12N.

Table XV Installation dimensions / TSS Part No.

Bore Dia.	Groove Dia.	Groove Width	TSS Part No.	O-Ring Dimensions
D_N H9	**d1** h9	L_1 +0.2		
8.0	3.1	2.2	PT0000080	2.90 x 1.78
10.0	5.1	2.2	PT0000100	4.80 x 1.8
12.0	7.1	2.2	PT0000120	6.70 x 1.8
14.0	9.1	2.2	PT0000140	8.75 x 1.8
15.0	7.5	3.2	PT0100150	7.59 x 2.62
16.0	**11.1**	**2.2**	**PT0000160**	**10.82 x 1.78**
16.0	**8.5**	**3.2**	**PT0100160**	**7.59 x 2.62**
18.0	13.1	2.2	PT0000180	12.42 x 1.78
18.0	10.5	3.2	PT0100180	9.19 x 2.62
19.05	11.55	3.2	PT0100190	10.77 x 2.62
20.0	**15.1**	**2.2**	**PT0000200**	**14.00 x 1.78**
20.0	**12.5**	**3.2**	**PT0100200**	**12.37 x 2.62**
21.0	13.5	3.2	PT0100210	12.37 x 2.62
22.0	17.1	2.2	PT0000220	17.17 x 1.78
22.0	14.5	3.2	PT0100220	13.94 x 2.62
24.0	16.5	3.2	PT0100240	15.54 x 2.62
25.0	20.1	2.2	PT0000250	18.77 x 1.78
25.0	**17.5**	**3.2**	**PT0100250**	**17.12 x 2.62**
25.0	**14.0**	**4.2**	**PT0200250**	**13.87 x 3.53**
25.4	20.5	2.2	PT0000254	17.12 x 2.62
28.0	20.5	3.2	PT0100280	20.29 x 2.62
30.0	22.5	3.2	PT0100300	21.89 x 2.62
32.0	27.1	2.2	PT0000320	26.70 x 1.78
32.0	**24.5**	**3.2**	**PT0100320**	**23.47 x 2.62**

Bore Dia.	Groove Dia.	Groove Width	TSS Part No.	O-Ring Dimensions
D_N H9	**d1** h9	L_1 +0.2		
32.0	**21.0**	**4.2**	**PT0200320**	**20.22 x 3.53**
35.0	27.5	3.2	PT0100350	26.64 x 2.62
35.0	24.0	4.2	PT0200350	23.40 x 3.53
36.0	28.5	3.2	PT0100360	28.24 x 2.62
38.0	30.5	3.2	PT0100380	29.82 x 2.62
40.0	**32.5**	**3.2**	**PT0100400**	**31.42 x 2.62**
40.0	**29.0**	**4.2**	**PT0200400**	**28.17 x 3.53**
42.0	31.0	4.2	PT0200420	29.75 x 3.53
44.45	36.95	3.2	PT0100444	36.17 x 2.62
45.0	34.0	4.2	PT0200450	32.92 x 3.53
48.0	37.0	4.2	PT0200480	36.09 x 3.53
50.0	42.5	3.2	PT0100500	40.94 x 2.62
50.0	**39.0**	**4.2**	**PT0200500**	**37.70 x 3.53**
50.0	**34.5**	**6.3**	**PT0300500**	**32.69 x 5.33**
50.8	43.3	3.2	PT0100508	42.52 x 2.62
50.8	39.8	4.2	PT0200508	37.70 x 3.53
52.0	41.0	4.2	PT0200520	40.87 x 3.53
53.0	42.0	4.2	PT0200530	40.87 x 3.53
55.0	44.0	4.2	PT0200550	44.04 x 3.53
57.0	46.0	4.2	PT0200570	44.04 x 3.53
58.0	47.0	4.2	PT0200580	47.22 x 3.53
60.0	49.0	4.2	PT0200600	47.22 x 3.53
62.0	51.0	4.2	PT0200620	50.39 x 3.53
63.0	**52.0**	**4.2**	**PT0200630**	**50.39 x 3.53**

Bore Dia.	Groove Dia.	Groove Width	TSS Part No.	O-Ring Dimensions
D_N H9	**d1** h9	L_1 +0.2		
63.0	**47.5**	**6.3**	**PT0300630**	**46.99 x 5.33**
65.0	54.0	4.2	PT0200650	53.57 x 3.53
68.0	57.0	4.2	PT0200680	56.74 x 3.53
70.0	59.0	4.2	PT0200700	56.74 x 3.53
70.0	54.5	6.3	PT0300700	53.34 x 5.33
75.0	64.0	4.2	PT0200750	63.09 x 3.53
75.0	59.5	6.3	PT0300750	56.52 x 3.53
80.0	**69.0**	**4.2**	**PT0200800**	**66.27 x 3.53**
80.0	**64.5**	**6.3**	**PT0300800**	**62.87 x 5.33**
80.0	59.0	8.1	PT0400800	58 x 7.0
82.5	67.0	6.3	PT0300825	66.04 x 5.33
85.0	69.5	6.3	PT0300850	69.22 x 5.33
85.0	64.0	8.1	PT0400850	63 x 7.0
90.0	79.0	4.2	PT0200900	78.97 x 3.53
90.0	74.5	6.3	PT0300900	72.39 x 5.33
90.0	69.0	8.1	PT0400900	68 x 7.0
95.0	84.0	4.2	PT0200950	82.14 x 3.53
95.0	79.5	6.3	PT0300950	78.74 x 5.33
95.0	74.0	8.1	PT0400950	73 x 7.0
100.0	89.0	4.2	PT0201000	88.49 x 3.53
100.0	**84.5**	**6.3**	**PT0301000**	**81.92 x 5.33**
100.0	79.0	8.1	PT0401000	78 x 7.0
101.6	86.1	6.3	PT0301016	85.09 x 5.33
105.0	94.0	4.2	PT0201050	91.67 x 3.53
105.0	89.5	6.3	PT0301050	88.27 x 5.33
108.0	92.5	6.3	PT0301080	91.44 x 5.33
110.0	99.0	4.2	PT0201100	98.02 x 3.53
110.0	94.5	6.3	PT0301100	91.44 x 5.33
110.0	89.0	8.1	PT0401100	88 x 7.0
115.0	99.5	6.3	PT0301150	97.79 x 5.33
120.0	109.0	4.2	PT0201200	107.54 x 3.53
120.0	104.5	6.3	PT0301200	100.97 x 5.33
120.0	99.0	8.1	PT0401200	98 x 7.0
125.0	114.0	4.2	PT0201250	113.89 x 3.53
125.0	**109.5**	**6.3**	**PT0301250**	**107.32 x 5.33**
125.0	**104.0**	**8.1**	**PT0401250**	**103 x 7.0**

Bore Dia.	Groove Dia.	Groove Width	TSS Part No.	O-Ring Dimensions
D_N H9	**d1** h9	L_1 +0.2		
127.0	111.5	6.3	PT0301270	110.49 x 5.33
130.0	114.5	6.3	PT0301300	113.67 x 5.33
130.0	109.0	8.1	PT0401300	108 x 7.0
132.0	121.0	4.2	PT0201320	120.24 x 3.53
135.0	114.0	8.1	PT0401350	113.67 x 7.0
140.0	124.5	6.3	PT0301400	123.19 x 5.33
140.0	119.0	8.1	PT0401400	116.84 x 7.0
145.0	129.5	6.3	PT0301450	126.37 x 5.33
145.0	124.0	8.1	PT0401450	123.19 x 7.0
150.0	134.5	6.3	PT0301500	132.72 x 5.33
150.0	129.0	8.1	PT0401500	126.37 x 7.0
155.0	134.0	8.1	PT0401550	132.72 x 7.0
160.0	**144.5**	**6.3**	**PT0301600**	**142.24 x 5.33**
160.0	**139.0**	**8.1**	**PT0401600**	**135.89 x 7.0**
165.0	144.0	8.1	PT0401650	142.24 x 7.0
170.0	149.0	8.1	PT0401700	145.42 x 7.0
175.0	154.0	8.1	PT0401750	151.77 x 7.0
180.0	164.5	6.3	PT0301800	164.47 x 5.33
180.0	159.0	8.1	PT0401800	158.12 x 7.0
190.0	169.0	8.1	PT0401900	164.47 x 7.0
194.0	178.5	6.3	PT0301940	177.17 x 5.33
200.0	**184.5**	**6.3**	**PT0302000**	**183.52 x 5.33**
200.0	**179.0**	**8.1**	**PT0402000**	**177.17 x 7.0**
205.0	184.0	8.1	PT0402050	183.52 x 7.0
210.0	189.0	8.1	PT0402100	183.52 x 7.0
215.0	194.0	8.1	PT0402150	189.87 x 7.0
220.0	199.0	8.1	PT0402200	196.22 x 7.0
230.0	214.5	6.3	PT0302300	208.92 x 5.33
230.0	209.0	8.1	PT0402300	208.92 x 7.0
240.0	219.0	8.1	PT0402400	215.27 x 7.0
250.0	**229.0**	**8.1**	**PT0402500**	**227.97 x 7.0**
250.0	**225.5**	**8.1**	**PT0802500**	**215.27 x 7.0**
250.0	134.5	6.3	PT0302500	234.32 x 5.33
254.0	233.0	8.1	PT0402540	227.97 x 7.0
260.0	239.0	8.1	PT0402600	240.67 x 7.0
265.0	244.0	8.1	PT0402650	240.67 x 7.0

Bore Dia.	Groove Dia.	Groove Width	TSS Part No.	O-Ring Dimensions
D_N H9	**d1** h9	L_1 +0.2		
268.0	247.0	8.1	PT0402680	240.67 x 7.0
270.0	249.0	8.1	PT0402700	240.67 x 7.0
280.0	259.0	8.1	PT0402800	253.37 x 7.0
290.0	269.0	8.1	PT0402900	266.07 x 7.0
300.0	279.0	8.1	PT0403000	278.77 x 7.0
300.0	275.5	8.1	PT0803000	266.07 x 7.0
304.8	283.8	8.1	PT0403048	278.77 x 7.0
310.0	289.0	8.1	PT0403100	278.77 x 7.0
320.0	**299.0**	**8.1**	**PT0403200**	**291.47 x 7.0**
320.0	**295.5**	**8.1**	**PT0803200**	**291.47 x 7.0**
330.0	305.5	8.1	PT0803300	304.17 x 7.0
340.0	315.5	8.1	PT0803400	316.87 x 7.0
350.0	325.5	8.1	PT0803500	316.87 x 7.0
360.0	335.5	8.1	PT0803600	329.57 x 7.0
370.0	345.5	8.1	PT0803700	342.27 x 7.0
380.0	355.5	8.1	PT0803800	354.97 x 7.0
400.0	**375.5**	**8.1**	**PT0804000**	**367.67 x 7.0**
420.0	395.5	8.1	PT0804200	393.07 x 7.0
430.0	405.5	8.1	PT0804300	405.26 x 7.0
440.0	415.5	8.1	PT0804400	405.26 x 7.0
450.0	425.5	8.1	PT0804500	417.96 x 7.0
460.0	435.5	8.1	PT0804600	430.66 x 7.0
480.0	455.5	8.1	PT0804800	456.06 x 7.0
500.0	**475.5**	**8.1**	**PT0805000**	**468.76 x 7.0**
555.0	530.5	8.1	PT0805550	506.86 x 7.0
600.0	575.5	8.1	PT0806000	557.66 x 7.0
640.0	615.5	8.1	PT0806400	608.08 x 7.0
660.0	635.5	8.1	PT0806600	633.48 x 7.0
700.0	672.0	9.5	PT0507000	670 x 8.4
710.0	682.0	9.5	PT0507100	680 x 8.4
740.0	712.0	9.5	PT0507400	710 x 8.4
780.0	752.0	9.5	PT0507800	750 x 8.4
800.0	772.0	9.5	PT0508000	770 x 8.4
900.0	872.0	9.5	PT0509000	870 x 8.4
1000.0	972.0	9.5	PT05X1000	970 x 8.4
1000.0	962.0	13.8	PT06X1000	960 x 12.0
1050.0	1022.0	9.5	PT05X1050	1020 x 8.4
1065.0	1027.0	13.8	PT06X1065	1025 x 12.0
1070.0	1032.0	13.8	PT06X1070	1030 x 12.0
1200.0	1172.0	9.5	PT05X1200	1170 x 8.4
1200.0	1162.0	13.8	PT06X1200	1160 x 12.0
1225.0	1187.0	13.8	PT06X1225	1185 x 12.0
1500.0	1462.0	13.8	PT06X1500	1460 x 12.0
2000.0	1962.0	13.8	PT06X2000	1960 x 12.0
2700.0	2662.0	13.8	PT06X2700	2660 x 12.0

All dimensions in **bold** type are suitable for installation in grooves to ISO 7425/1, bore dia. in accordance with ISO 3320. Other dimensions and all intermediate sizes up to 2700 mm dia. including inch sizes can be supplied.

All O-Rings with 12 mm cross section are delivered as special profilring.