





DR60 SERIES

GENERAL GAS REGULATOR





FUNCTIONAL SCHEMATIC

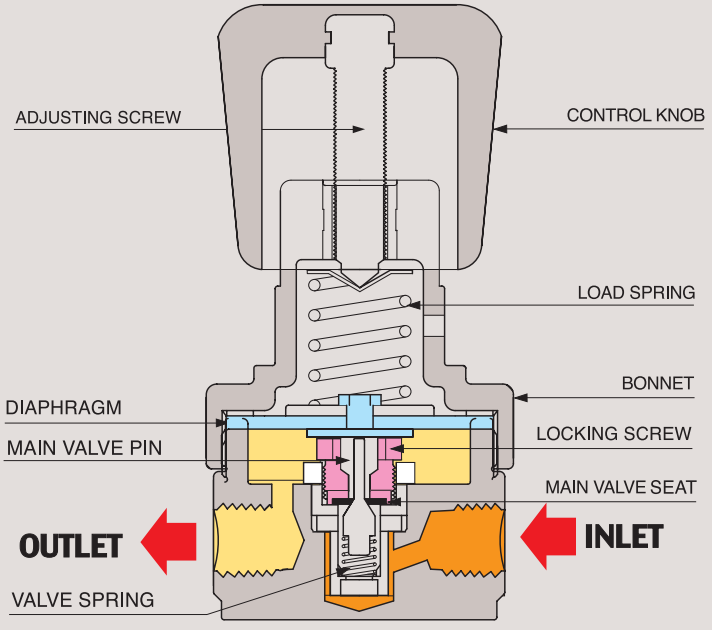

FLOW CHART

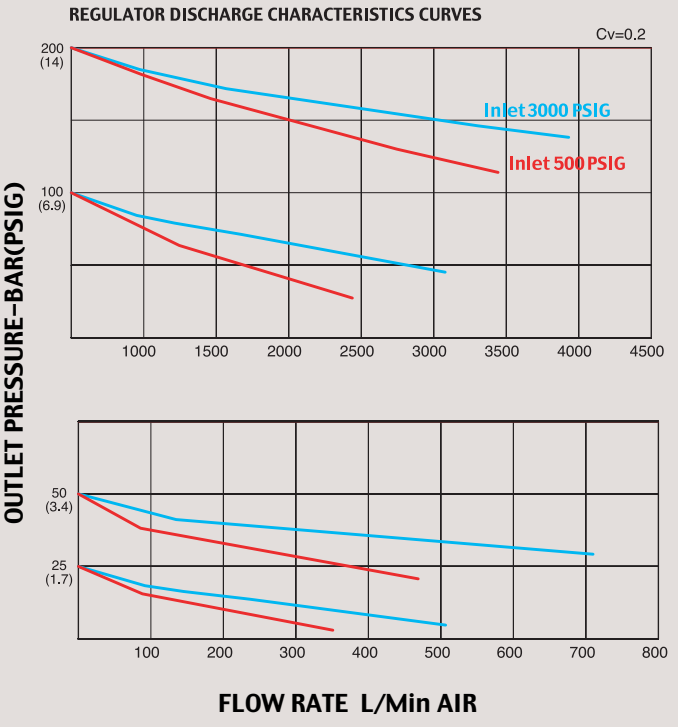

GENERAL GAS REGULATOR

DR60 SERIES

DR60 시리즈의 바디 재질은 Nickel Plated Forged Brass이며 가장 일반적인 산업용 가스를 사용하기에 가장 이상적인 Gas Regulator입니다. 산업용 일반 배관 등에 적합하도록 설계되였으며, 3-ports 또는 4-ports 1/4″ NPT 타입으로 이루어져 있습니다. 내부의 부품은 sts or brass를 사용하였으며 Valve seat는Teflon를 사용하여 내구성이 뛰어나며 다이아후렘은 특수고무를 사용하였습니다. Inlet과 Outlet Gauge가 기본으로 조립된 제품입니다.

DR60 Series are the industrial gas regulators,applicable to oxygen and non-corrosive gases. Available for general pipeworks and cylinder equipments. They are designed and produced for the customers to use them easily and expediently with ultimate safety. Special rubber is used for its internal diaphragm and inlet and outlet gauge are assembled as standard.

Recommendations to Use

Each regulator is designed and manufactured taking into full consideration of safety and easy operation. However, for doubled safety and use of the regulators most effectively, it is strongly recommended to use each regulator within the range of 25% ~ 75% of its working pressure. It is also recommended to use within this range for most smooth operation and extension of products life.

SPECIFICATIONS

Ports	1/4″ NPT type DR60-A000-1 3-ports DR60-A000-2 4-ports
Body Material	Nickel Plated Forged Brass
Bonnet Material	Zinc(Zn) Casting Nickel Plated
Diaphragm	Particular of Synthetic Rubber
Valve Seat	Teflon®
Valve Spring	Stainless steel
Inlet Pressure Ranges	DR60-A000-1, 3500psig (238bar) DR60-B000-1, 500psig (35bar)
Outlet Pressure Ranges	25(1.7bar), 50(3.4bar), 100(7bar), 200psig(14bar)
Flow Cappacity	CV=0.2 (standard)
Operating Temperature	-40°C - +70°C(-40°F - +160°F) (standard)
Standard Optional	CGA, Inlet and Outlet Gauges, etc..

INSTALLATION DIMENSIONS METRIC EQUIVALENTS ARE IN PARENTHESES

▪ GAUGE PORT OPTIONS

MODEL DR60-A025-1
(3-Ports)

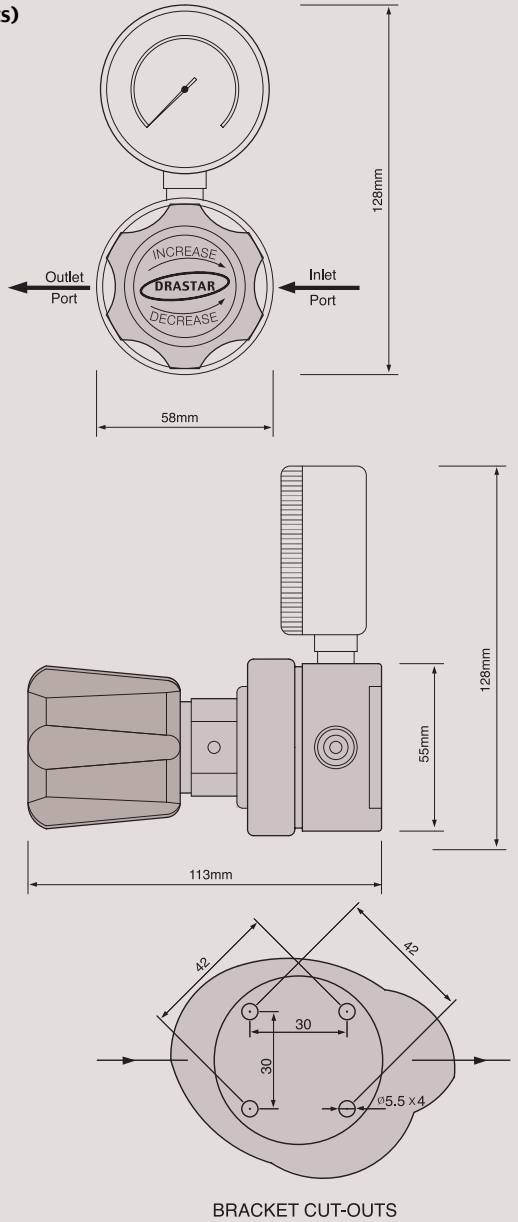

MODEL DR60-A025-2
(4-Ports)

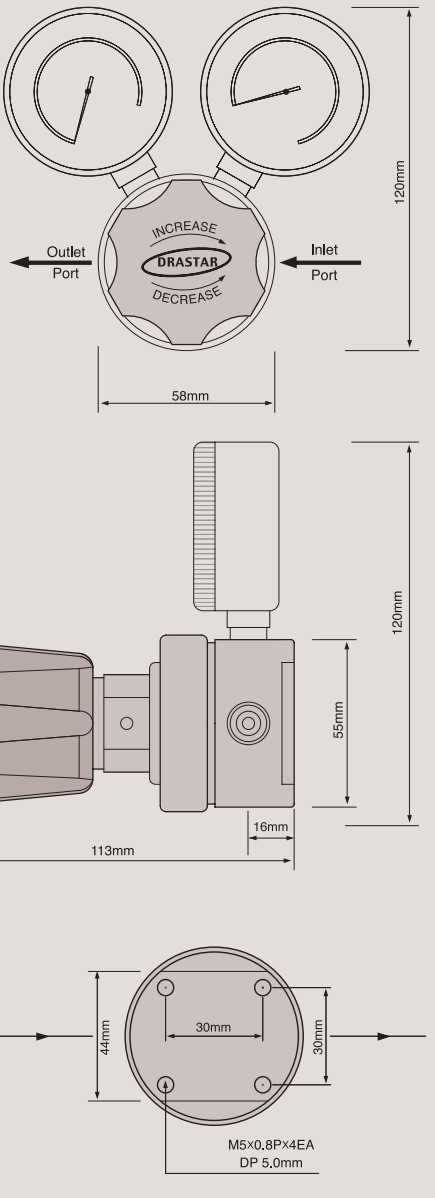

BRACKET CUT-OUTS

ORDERING INFORMATION

DR60	-	A	025	-	1

BASIS SERIESNUMBER	MAX. INLET PRESSURE	OUTLET PRESSURE RANGES	INLET OUTLET PORTS SIZE
DR60 Series	A = 3500psi(238bar) B = 500psi(35bar)	025 = 1-25psig (.1-1.7bar) 050 = 1-50psig (.1-3.5bar) 100 = 1-100psig (.1-7bar) 200 = 1-200psig (.2-14bar)	1 = 3-Ports 2 = 4-Ports 1/4″ NPT Type

DR60 SERIES PART LIST

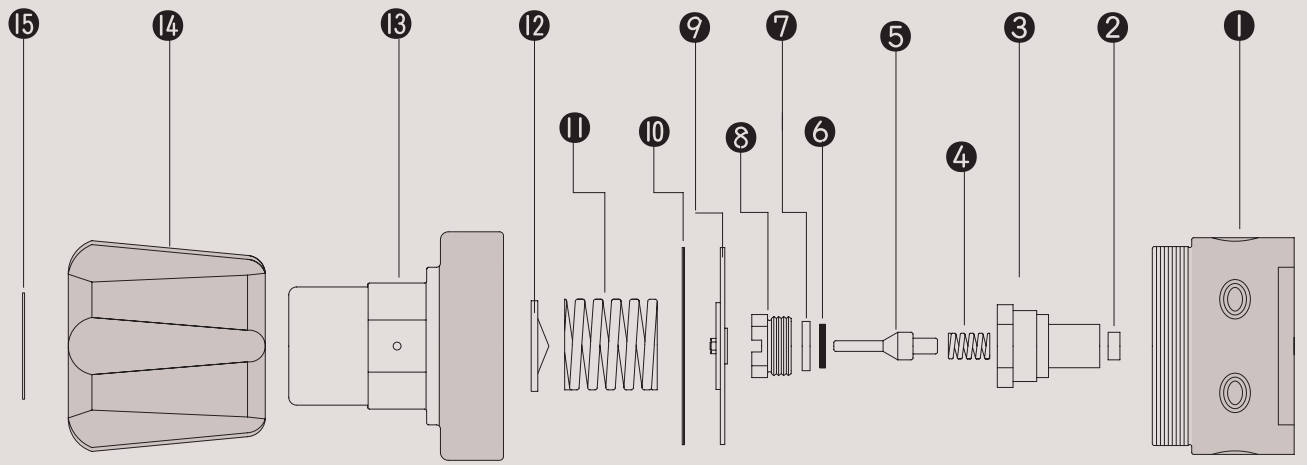

STANDARD MODEL SERIES

Item No.	Description	Part No.	Model Application
01	Body	DR60-02-02	02-02 Brass
02	Cartridge Filter	DR60-62-01	All Model Same
03	Cartridge	DR60-66-01	All Model Same
04	ValveSpring	DR60-04-02	04-01 STS 304
05	Main Valve	DR60-06-01	06-01 STS 316L
06	Valve Seat	DR60-10-01	10-01 PFA
07	Valve Seat Cartridge	DR60-08-01	All Model Same
08	Loocking Screw	DR60-12-03	All Model Same
09	Diaphragm Assembly	DR60-16-04	16-04 NBR / 16-05 EPDM
10	Gasket	DR60-16-00	All Model Same
11	Load Spring	DR60-38-01	38-01 25psi / 38-02 50psi / 38-03 100psi / 38-04 200psi
12	Pivot	DR60-40-01	All Model Same
13	Bonnet	DR60-44-03	All Model Same
14	Control Knob	DR60-50-03	All Model Same
15	Name Plate	DR60-56-00	All Model Same