Loudspeaker Specification Sheet

Model Number : BH12L044

Revision : Rev 00.
Date : 20.JUN.17

Features:

- Driver Type : Full Range
- Size : 58mm (2.2inch)
- Magnet : Ferrite
- Frame : Steel
- Diaphragm : Polypropylene



Specifications:

- Rated Power Handling : 10W (RMS)
- Characteristic Sensitivity : 80dB ± 2dB (1W/1m)
- Nominal Impedance : 8Ω
- Free Air Resonance Frequency, fs : 180Hz ± 20%
- Frequency Range : fs ~ 15kHz ± 20%
- Voice Coil Inner Diameter : Ø16.28 (mm)
- Net Weight : 200g (7.1oz)

Dimensions & Mounting Information:

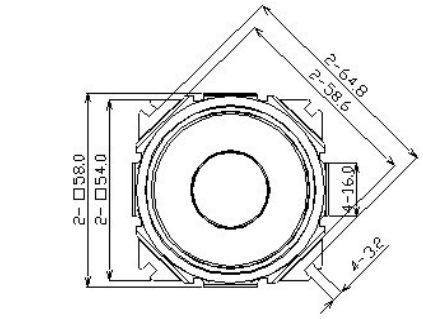

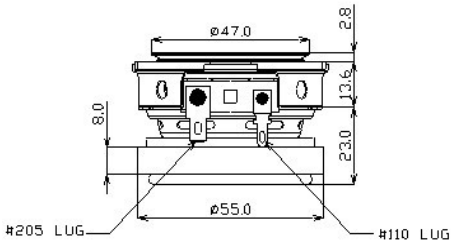

Frequency & Impedance Response:

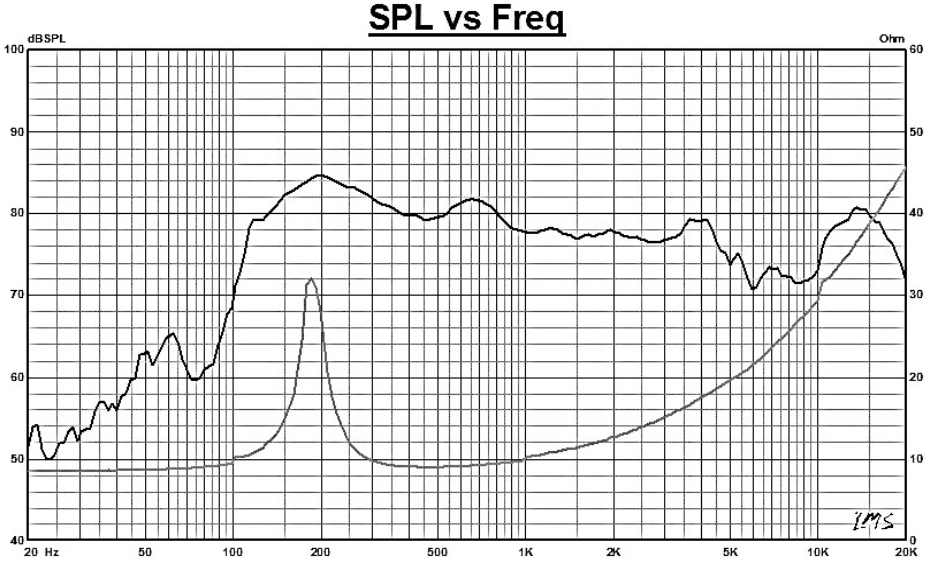

http://www.bhacoustic.com
105, Sinwon-ro, Yeongtong-gu, Suwon-si, Gyeonggi-do, Republic of Korea 16678
Tel : +82(31)-206-5477 Fax : +82-(21)-206-5473