REV.NO.	DATE	DESCRIPTION	REV'D BY	CHE'D BY	APP'D BY
△					
△					
△					

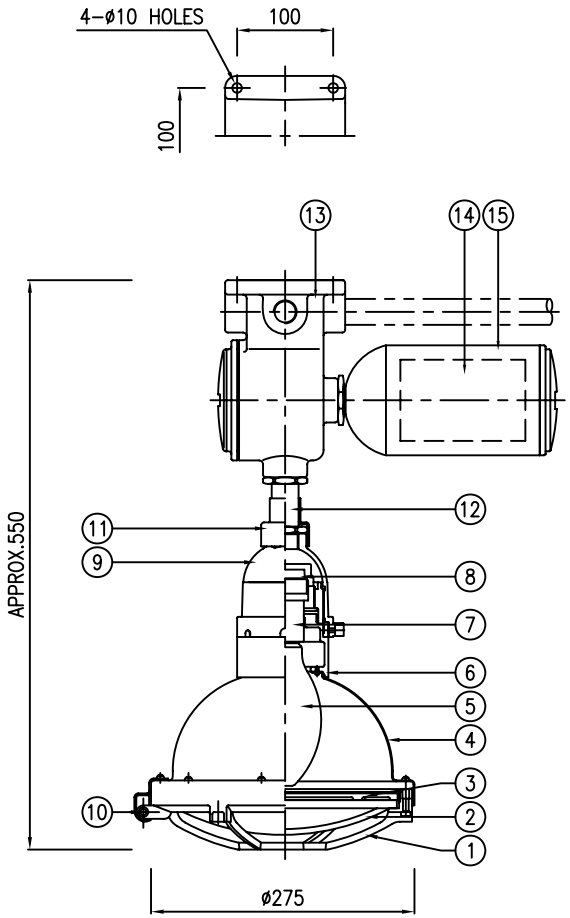

TYPE "_"

SELECTION TABLE

ITEM NO.	LAMP	LAMP SIZE	Q'TY
	☐ MERCURY VAPOR ☐ H. P. SODIUM ☐ METAL HALIDE	☐ 100W ☐	SET

SUPPLY VOLTAGE: ☐ AC110V ☐ AC230V ☐ AC120V ☐ AC240V ☐ AC208V ☐ AC277V ☐ AC220V ☐

FREQUENCY: ☐ 50Hz ☐ 60Hz

HUB SCHEDULE

THREAD	☐ NPT ☐ PF ☐ MM ☐
SIZE	☐ 3/4" ☐ 1" ☐ M ☐
LOCATION	1 / 2 / 3 / 4 ☐ 1-2 ☐ 1-3 ☐ 1-2-3 ☐ 1-2-3-4
	☐ W/2-BLIND PLUGS ☐ NONE

NOTE
1.

NO	PARTS	MATERIAL	REMARK
15	BALLAST HOUSING	CARBON STEEL	
14	BALLAST	FOR H.I.D LAMP	HIGH POWER FACTOR
13	MOUNTING BOX	CAST ALUMINIUM ALLOY	
12	NIPPLE	STEEL	
11	WEATHERPROOF CAP	SILICONE RUBBER	
10	HINGE PIN	STAINLESS STEEL ROD	SUS304
9	HOOD	DIE CASTING ALUMINIUM	
8	LAMP HOLDER MTG. PLATE	PHENOL RESIN	
7	LAMP HOLDER	PORCELAIN W/MEDIUM SOCKET	E26
6	LAMP HOLDER HOUSING	CAST ALUMINIUM ALLOY	
5	LAMP	H.I.D LAMP	SEE SELECTION TABLE
4	BODY	HIGH GRADE ALUMINIUM SHEET	
3	LOCK RING	DIE CASTING ALUMINIUM	
2	GLOBE	HEAT RESISTANT HARD GLASS	
1	GUARD	DIE CASTING ALUMINIUM	

SCALE	N.S	APPROVED BY	
UNIT	mm	CHECKED BY	
DATE		DRAWN BY	

南北電氣株式會社
NAMBUK ELECTRIC CO.,LTD

TITLE	H.I.D LTG. FIXTURE (CEILING MTG. TYPE)	APPLICATION AREA	
CAT NO.	SR-L SERIES	CLASS OF PROTECTION	Ex nR II T*
COLOR FINISHING	MUNSELL NO. 7.5BG 6/1.5	DRAWING NO.	NB-ELH-D1-A01

* LENGTH(L) ORDER MADE.

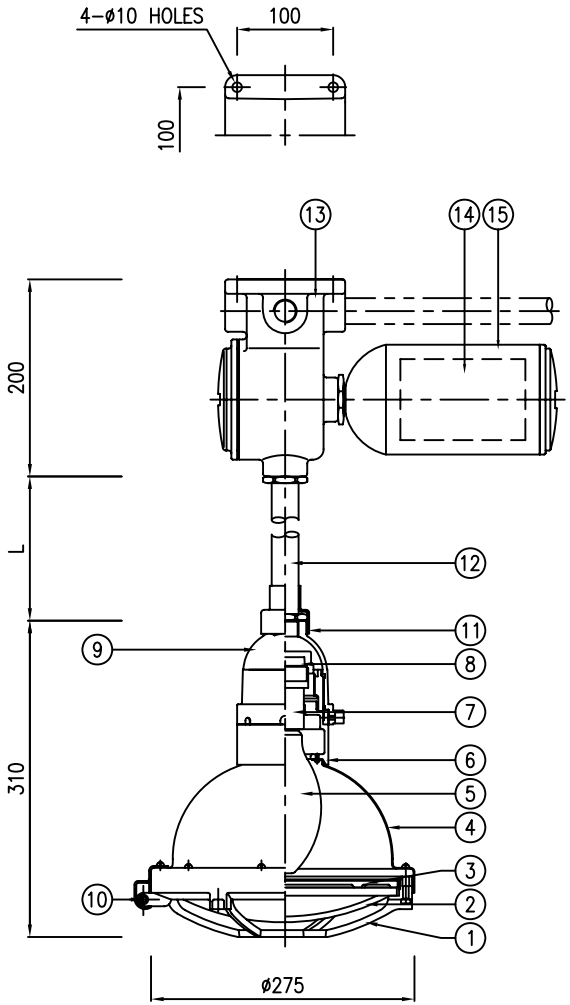

TYPE "_"

REV.NO.	DATE	DESCRIPTION	REV'D BY	CHE'D BY	APP'D BY
△					
△					
△					

SELECTION TABLE

ITEM NO.	LAMP	LAMP SIZE	Q'TY
	☐ MERCURY VAPOR ☐ H. P. SODIUM ☐ METAL HALIDE	☐ 100W ☐	SET

SUPPLY VOLTAGE: ☐ AC110V ☐ AC230V ☐ AC120V ☐ AC240V ☐ AC208V ☐ AC277V ☐ AC220V ☐

FREQUENCY: ☐ 50Hz ☐ 60Hz

HUB SCHEDULE

THREAD	☐ NPT ☐ PF ☐ MM ☐
SIZE	☐ 3/4" ☐ 1" ☐ M ☐
LOCATION	1 / 2 / 3 / 4 ☐ 1-2 ☐ 1-3 ☐ 1-2-3 ☐ 1-2-3-4
	☐ W/2-BLIND PLUGS ☐ NONE

NOTE
1.

NO	PARTS	MATERIAL	REMARK
15	BALLAST HOUSING	CARBON STEEL	
14	BALLAST	FOR H.I.D LAMP	HIGH POWER FACTOR
13	MOUNTING BOX	CAST ALUMINIUM ALLOY	
12	SUSPENSION STEM	RIGID STEEL PIPE	
11	WEATHERPROOF CAP	SILICONE RUBBER	
10	HINGE PIN	STAINLESS STEEL ROD	SUS304
9	HOOD	DIE CASTING ALUMINIUM	
8	LAMP HOLDER MTG. PLATE	PHENOL RESIN	
7	LAMP HOLDER	PORCELAIN W/MEDIUM SOCKET	E26
6	LAMP HOLDER HOUSING	CAST ALUMINIUM ALLOY	
5	LAMP	H.I.D LAMP	SEE SELECTION TABLE
4	BODY	HIGH GRADE ALUMINIUM SHEET	
3	LOCK RING	DIE CASTING ALUMINIUM	
2	GLOBE	HEAT RESISTANT HARD GLASS	
1	GUARD	DIE CASTING ALUMINIUM	

SCALE	N.S	APPROVED BY	
UNIT	mm	CHECKED BY	
DATE		DRAWN BY	

南北電氣株式會社
NAMBUK ELECTRIC CO.,LTD

TITLE	H.I.D LTG. FIXTURE (PENDANT MTG. TYPE)	APPLICATION AREA	
CAT NO.	SR-L SERIES	CLASS OF PROTECTION	Ex nR II T*
COLOR FINISHING	MUNSELL NO. 7.5BG 6/1.5	DRAWING NO.	NB-ELH-D1-A01

REV.NO.	DATE	DESCRIPTION	REV'D BY	CHE'D BY	APP'D BY
△					
△					
△					

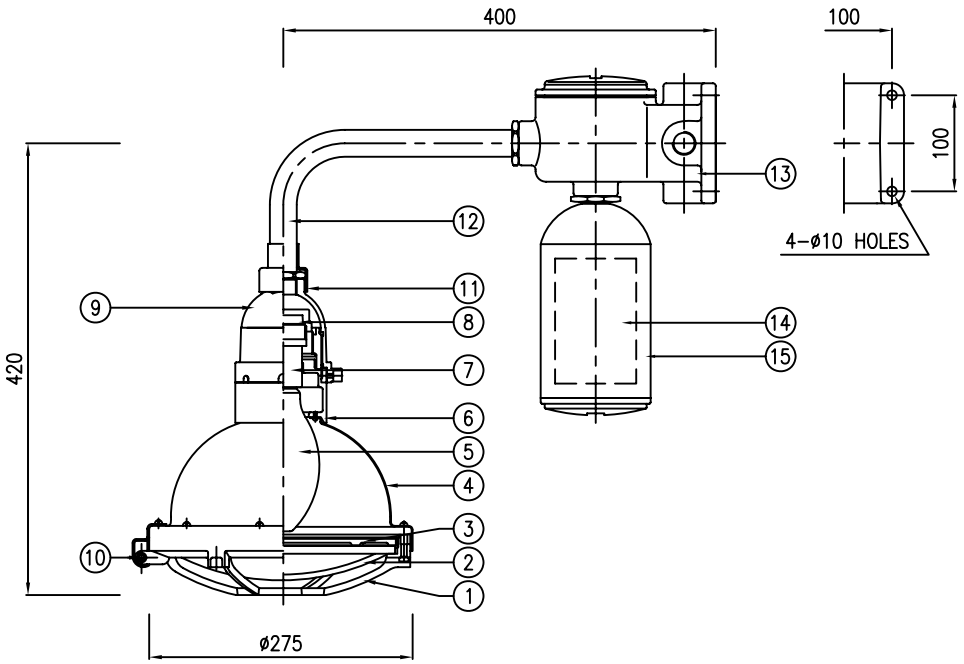

TYPE "_"

SELECTION TABLE

ITEM NO.	LAMP	LAMP SIZE	Q'TY
	☐ MERCURY VAPOR	☐ 100W	SET
		☐	
	☐ H. P. SODIUM		
	☐ METAL HALIDE		

SUPPLY VOLTAGE	☐ AC110V ☐ AC230V ☐ AC120V ☐ AC240V ☐ AC208V ☐ AC277V ☐ AC220V ☐	FREQUENCY	☐ 50Hz ☐ 60Hz	
HUB SCHEDULE	THREAD	☐ NPT ☐ PF ☐ MM ☐		
	SIZE	☐ 3/4" ☐ 1" ☐ M ☐		
	LOCATION	1 / 2 / 4 / 3	☐ 1-2 ☐ 1-3 ☐ 1-2-3 ☐ 1-2-3-4	
		☐ W/2-BLIND PLUGS ☐ NONE		

NOTE
1.

NO	PARTS	MATERIAL	REMARK
15	BALLAST HOUSING	CARBON STEEL	
14	BALLAST	FOR H.I.D LAMP	HIGH POWER FACTOR
13	MOUNTING BOX	CAST ALUMINIUM ALLOY	
12	SUSPENSION STEM	RIGID STEEL PIPE	
11	WEATHERPROOF CAP	SILICONE RUBBER	
10	HINGE PIN	STAINLESS STEEL ROD	SUS304
9	HOOD	DIE CASTING ALUMINIUM	
8	LAMP HOLDER MTG. PLATE	PHENOL RESIN	
7	LAMP HOLDER	PORCELAIN W/MEDIUM SOCKET	E26
6	LAMP HOLDER HOUSING	CAST ALUMINIUM ALLOY	
5	LAMP	H.I.D LAMP	SEE SELECTION TABLE
4	BODY	HIGH GRADE ALUMINIUM SHEET	
3	LOCK RING	DIE CASTING ALUMINIUM	
2	GLOBE	HEAT RESISTANT HARD GLASS	
1	GUARD	DIE CASTING ALUMINIUM	

SCALE	N.S	APPROVED BY	
UNIT	mm	CHECKED BY	
DATE		DRAWN BY	

南北電氣株式會社
NAMBUK ELECTRIC CO.,LTD

TITLE	H.I.D LTG. FIXTURE (BRACKET MTG. TYPE)	APPLICATION AREA	
CAT NO.	SR-L SERIES	CLASS OF PROTECTION	Ex nR II T*
COLOR FINISHING	MUNSELL NO. 7.5BG 6/1.5	DRAWING NO.	NBE-LH-D1-A01

REV.NO.	DATE	DESCRIPTION	REV'D BY	CHE'D BY	APP'D BY
△					
△					
△					

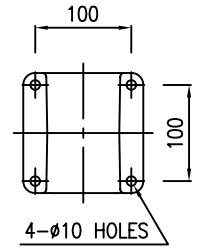

VIEW A-A'

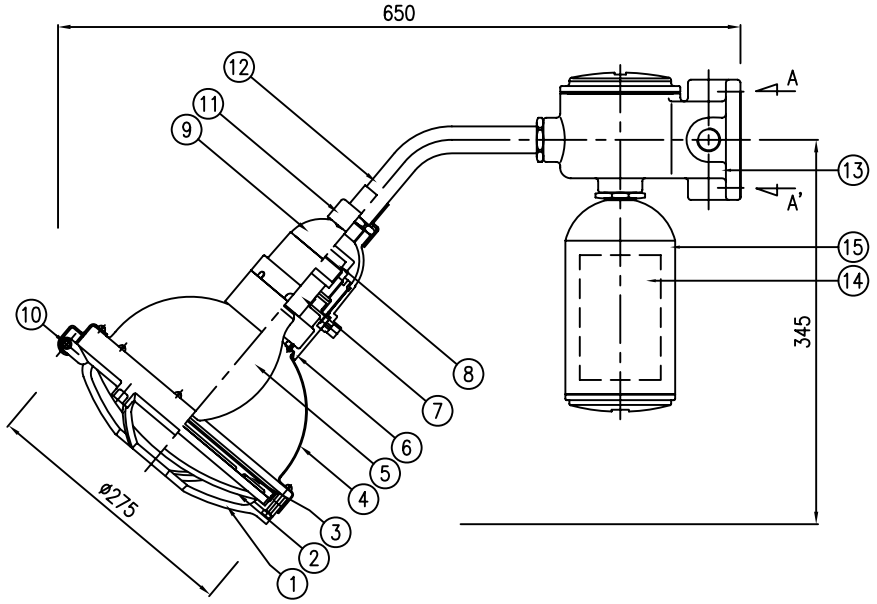

TYPE "_"

SELECTION TABLE

ITEM NO.	LAMP	LAMP SIZE	Q'TY
	☐ MERCURY VAPOR	☐ 100W	SET
		☐	
	☐ H. P. SODIUM		
	☐ METAL HALIDE		

SUPPLY VOLTAGE	☐ AC110V ☐ AC230V ☐ AC120V ☐ AC240V ☐ AC208V ☐ AC277V ☐ AC220V ☐	FREQUENCY	☐ 50Hz ☐ 60Hz	
HUB SCHEDULE	THREAD	☐ NPT ☐ PF ☐ MM ☐		
	SIZE	☐ 3/4" ☐ 1" ☐ M ☐		
	LOCATION	1 / 2 / 4 / 3	☐ 1-2 ☐ 1-3 ☐ 1-2-3 ☐ 1-2-3-4	
	☐ W/2-BLIND PLUGS ☐ NONE			

NOTE
1.

NO	PARTS	MATERIAL	REMARK
15	BALLAST HOUSING	CARBON STEEL	
14	BALLAST	FOR H.I.D LAMP	HIGH POWER FACTOR
13	MOUNTING BOX	CAST ALUMINIUM ALLOY	
12	SUSPENSION STEM	RIGID STEEL PIPE	
11	WEATHERPROOF CAP	SILICONE RUBBER	
10	HINGE PIN	STAINLESS STEEL ROD	SUS304
9	HOOD	DIE CASTING ALUMINIUM	
8	LAMP HOLDER MTG. PLATE	PHENOL RESIN	
7	LAMP HOLDER	PORCELAIN W/MEDIUM SOCKET	E26
6	LAMP HOLDER HOUSING	CAST ALUMINIUM ALLOY	
5	LAMP	H.I.D LAMP	SEE SELECTION TABLE
4	BODY	HIGH GRADE ALUMINIUM SHEET	
3	LOCK RING	DIE CASTING ALUMINIUM	
2	GLOBE	HEAT RESISTANT HARD GLASS	
1	GUARD	DIE CASTING ALUMINIUM	

SCALE	N.S	APPROVED BY	
UNIT	mm	CHECKED BY	
DATE		DRAWN BY	

南北電氣株式會社
NAMBUK ELECTRIC CO.,LTD

TITLE	H.I.D LTG. FIXTURE (40° BRACKET MTG. TYPE)	APPLICATION AREA	
CAT NO.	SR-L SERIES	CLASS OF PROTECTION	Ex nR II T*
COLOR FINISHING	MUNSELL NO. 7.5BG 6/1.5	DRAWING NO.	NB-ELH-D1-A01

* LENGTH(L) ORDER MADE.

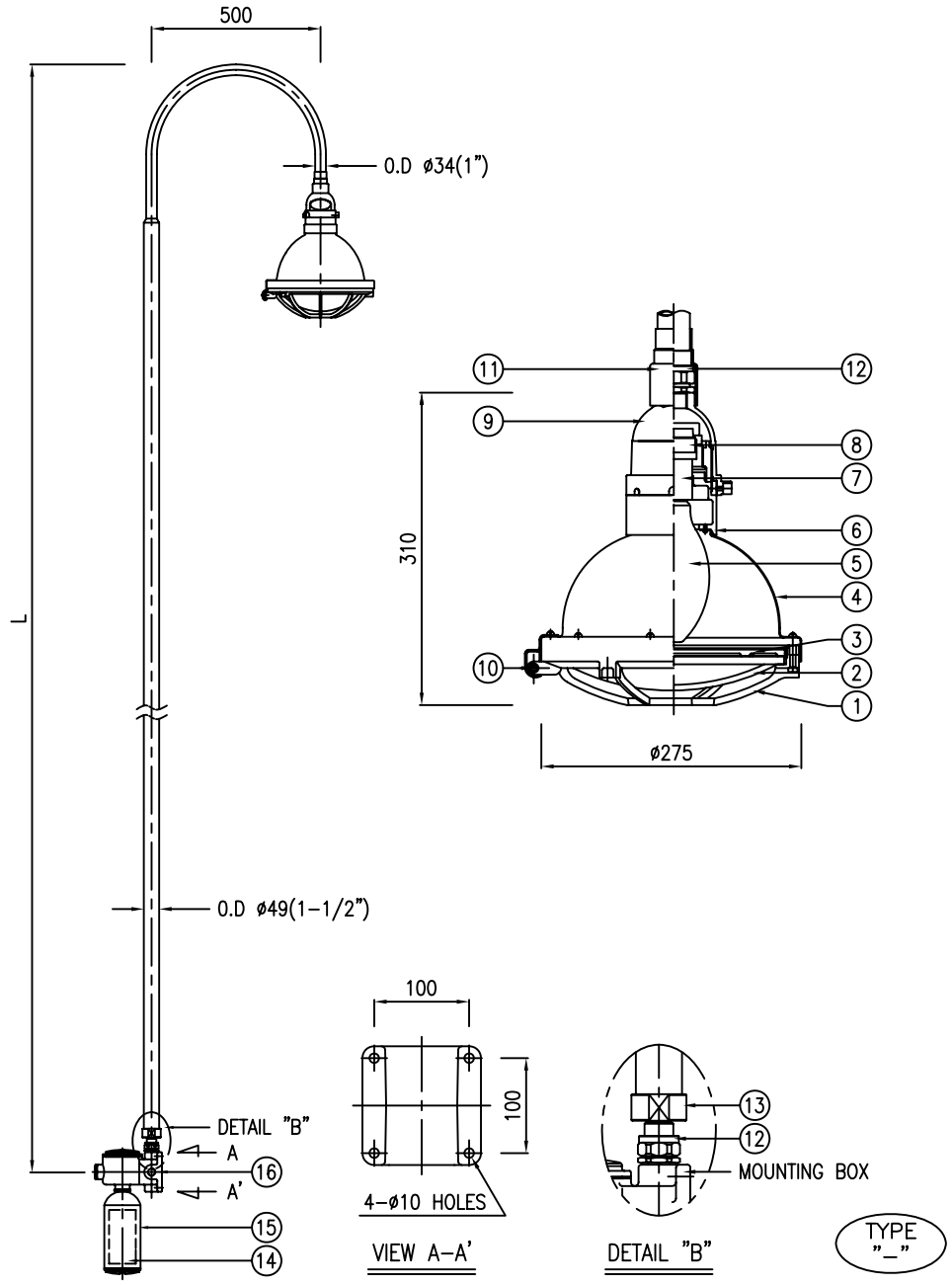

REV.NO.	DATE	DESCRIPTION	REV'D BY	CHE'D BY	APP'D BY
△					
△					
△					

SELECTION TABLE

ITEM NO.	LAMP	LAMP SIZE	Q'TY
	☐ MERCURY VAPOR	☐ 100W	SET
		☐	
	☐ H. P. SODIUM		
	☐ METAL HALIDE		

SUPPLY VOLTAGE	☐ AC110V ☐ AC230V ☐ AC120V ☐ AC240V ☐ AC208V ☐ AC277V ☐ AC220V ☐	FREQUENCY ☐ 50Hz ☐ 60Hz
HUB SCHEDULE	THREAD	☐ NPT ☐ PF ☐ MM ☐
	SIZE	☐ 3/4" ☐ 1" ☐ M ☐
	LOCATION	POLE (1, 2, 3) ☐ P-1 ☐ P-2 ☐ P-1-2 ☐ P-1-2-3
		☐ W/2-BLIND PLUGS ☐ NONE

NOTE
1.

NO	PARTS	MATERIAL	REMARK
16	MOUNTING BOX	CAST ALUMINIUM ALLOY	
15	BALLAST HOUSING	CARBON STEEL	
14	BALLAST	FOR H.I.D LAMP	HIGH POWER FACTOR
13	SOCKET	CARBON STEEL	
12	UNION COUPLING	CARBON STEEL	
11	WEATHERPROOF CAP	SILICONE RUBBER	
10	HINGE PIN	STAINLESS STEEL ROD	SUS304
9	HOOD	DIE CASTING ALUMINIUM	
8	LAMP HOLDER MTG. PLATE	PHENOL RESIN	
7	LAMP HOLDER	PORCELAIN W/MEDIUM SOCKET	E26
6	LAMP HOLDER HOUSING	CAST ALUMINIUM ALLOY	
5	LAMP	H.I.D LAMP	SEE SELECTION TABLE
4	BODY	HIGH GRADE ALUMINIUM SHEET	
3	LOCK RING	DIE CASTING ALUMINIUM	
2	GLOBE	HEAT RESISTANT HARD GLASS	
1	GUARD	DIE CASTING ALUMINIUM	

SCALE	N.S	APPROVED BY	
UNIT	mm	CHECKED BY	
DATE		DRAWN BY	

南北電氣株式會社
NAMBUK ELECTRIC CO.,LTD

TITLE	H.I.D LTG. FIXTURE (HAND RAIL TYPE)	APPLICATION AREA	
CAT NO.	SR-L SERIES	CLASS OF PROTECTION	Ex nR II T*
COLOR FINISHING	LTG. FIXTURE : MUNSELL NO. 7.5BG 6/1.5 POLE : HOT DIP GALVANIZED	DRAWING NO.	NB-ELH-D1-A01

REV.NO.	DATE	DESCRIPTION	REV'D BY	CHE'D BY	APP'D BY
△					
△					
△					

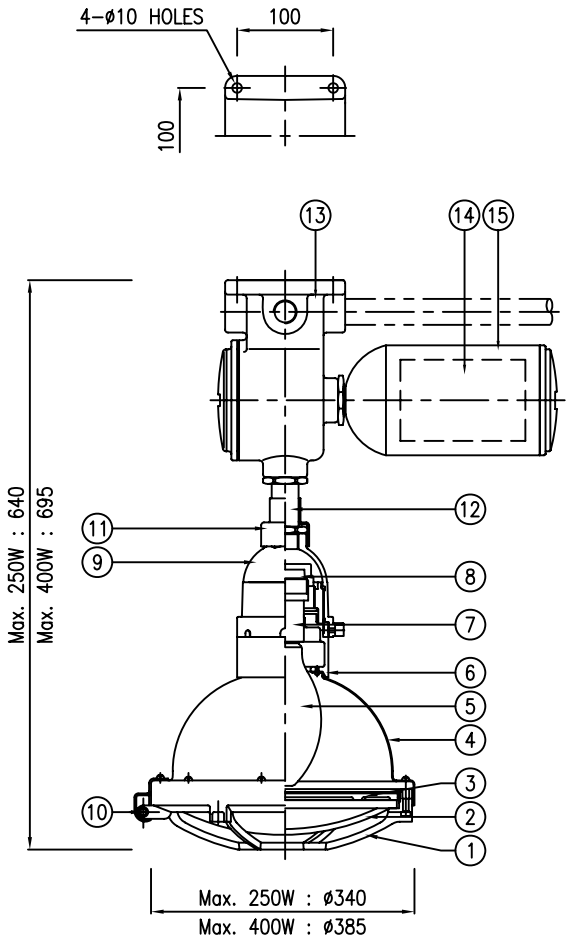

TYPE "_"

SELECTION TABLE

ITEM NO.	LAMP	LAMP SIZE	Q'TY
	☐ MERCURY VAPOR	☐ 150W	SET
		☐ 175W	SET
	☐ H. P. SODIUM	☐ 200W	SET
		☐ 250W	SET
	☐ METAL HALIDE	☐	
		☐ 400W	SET

SUPPLY VOLTAGE	☐ AC110V ☐ AC230V ☐ AC120V ☐ AC240V ☐ AC208V ☐ AC277V ☐ AC220V ☐	FREQUENCY	☐ 50Hz ☐ 60Hz		
HUB SCHEDULE	THREAD	☐ NPT ☐ PF ☐ MM ☐			
	SIZE	☐ 3/4" ☐ 1" ☐ M ☐			
	LOCATION	1 / 2 / 4 / 3	☐ 1-2 ☐ 1-3 ☐ 1-2-3 ☐ 1-2-3-4		
	☐ W/2-BLIND PLUGS ☐ NONE				

NOTE
1.

NO	PARTS	MATERIAL	REMARK
15	BALLAST HOUSING	CARBON STEEL	
14	BALLAST	FOR H.I.D LAMP	HIGH POWER FACTOR
13	MOUNTING BOX	CAST ALUMINIUM ALLOY	
12	NIPPLE	STEEL	
11	WEATHERPROOF CAP	SILICONE RUBBER	
10	HINGE PIN	STAINLESS STEEL ROD	SUS304
9	HOOD	DIE CASTING ALUMINIUM	
8	LAMP HOLDER MTG. PLATE	PHENOL RESIN	
7	LAMP HOLDER	PORCELAIN W/MOGUL SOCKET	E39
6	LAMP HOLDER HOUSING	CAST ALUMINIUM ALLOY	
5	LAMP	H.I.D LAMP	SEE SELECTION TABLE
4	BODY	HIGH GRADE ALUMINIUM SHEET	
3	LOCK RING	DIE CASTING ALUMINIUM	
2	GLOBE	HEAT RESISTANT HARD GLASS	
1	GUARD	DIE CASTING ALUMINIUM	

SCALE	N.S	APPROVED BY	
UNIT	mm	CHECKED BY	
DATE		DRAWN BY	

南北電氣株式會社
NAMBUK ELECTRIC CO.,LTD

TITLE	H.I.D LTG. FIXTURE (CEILING MTG. TYPE)	APPLICATION AREA	
CAT NO.	SR-L SERIES	CLASS OF PROTECTION	Ex nR II T*
COLOR FINISHING	MUNSELL NO. 7.5BG 6/1.5	DRAWING NO.	NB-ELH-D1-A01

* LENGTH(L) ORDER MADE.

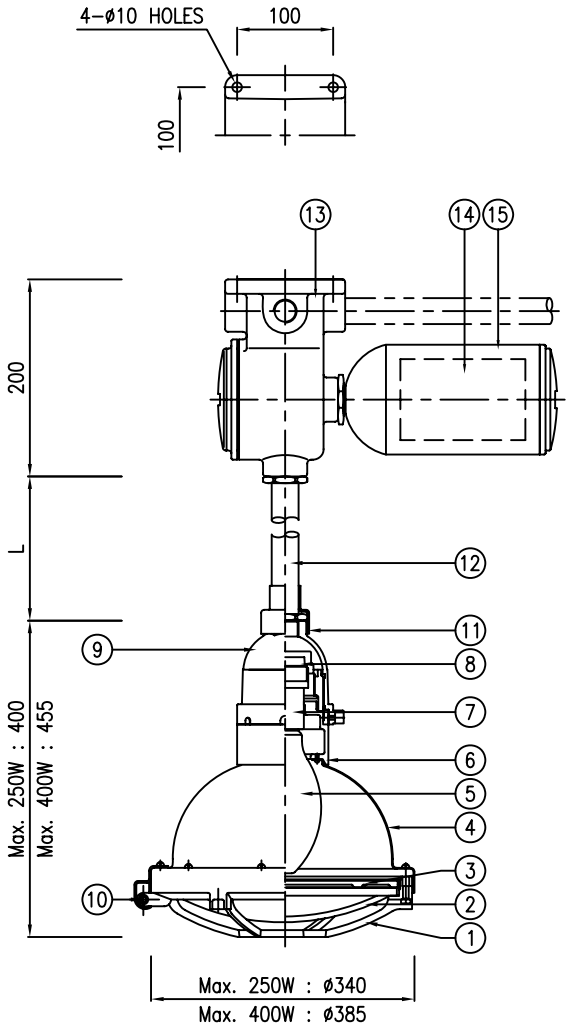

TYPE "_"

REV.NO.	DATE	DESCRIPTION	REV'D BY	CHE'D BY	APP'D BY
△					
△					
△					

SELECTION TABLE

ITEM NO.	LAMP	LAMP SIZE	Q'TY
	☐ MERCURY VAPOR	☐ 150W	SET
		☐ 175W	SET
	☐ H. P. SODIUM	☐ 200W	SET
		☐ 250W	SET
	☐ METAL HALIDE	☐	
		☐ 400W	SET

SUPPLY VOLTAGE	☐ AC110V ☐ AC230V ☐ AC120V ☐ AC240V ☐ AC208V ☐ AC277V ☐ AC220V ☐	FREQUENCY	☐ 50Hz ☐ 60Hz		
HUB SCHEDULE	THREAD	☐ NPT ☐ PF ☐ MM ☐			
	SIZE	☐ 3/4" ☐ 1" ☐ M ☐			
	LOCATION	1 / 2 / 4 / 3	☐ 1-2 ☐ 1-3 ☐ 1-2-3 ☐ 1-2-3-4		
	☐ W/2-BLIND PLUGS ☐ NONE				

NOTE
1.

NO	PARTS	MATERIAL	REMARK
15	BALLAST HOUSING	CARBON STEEL	
14	BALLAST	FOR H.I.D LAMP	HIGH POWER FACTOR
13	MOUNTING BOX	CAST ALUMINIUM ALLOY	
12	SUSPENSION STEM	RIGID STEEL PIPE	
11	WEATHERPROOF CAP	SILICONE RUBBER	
10	HINGE PIN	STAINLESS STEEL ROD	SUS304
9	HOOD	DIE CASTING ALUMINIUM	
8	LAMP HOLDER MTG. PLATE	PHENOL RESIN	
7	LAMP HOLDER	PORCELAIN W/MOGUL SOCKET	E39
6	LAMP HOLDER HOUSING	CAST ALUMINIUM ALLOY	
5	LAMP	H.I.D LAMP	SEE SELECTION TABLE
4	BODY	HIGH GRADE ALUMINIUM SHEET	
3	LOCK RING	DIE CASTING ALUMINIUM	
2	GLOBE	HEAT RESISTANT HARD GLASS	
1	GUARD	DIE CASTING ALUMINIUM	

SCALE	N.S	APPROVED BY	
UNIT	mm	CHECKED BY	
DATE		DRAWN BY	

南北電氣株式會社
NAMBUK ELECTRIC CO.,LTD

TITLE	H.I.D LTG. FIXTURE (PENDANT MTG. TYPE)	APPLICATION AREA	
CAT NO.	SR-L SERIES	CLASS OF PROTECTION	Ex nR II T*
COLOR FINISHING	MUNSELL NO. 7.5BG 6/1.5	DRAWING NO.	NB-ELH-D1-A01

REV.NO.	DATE	DESCRIPTION	REV'D BY	CHE'D BY	APP'D BY
△					
△					
△					

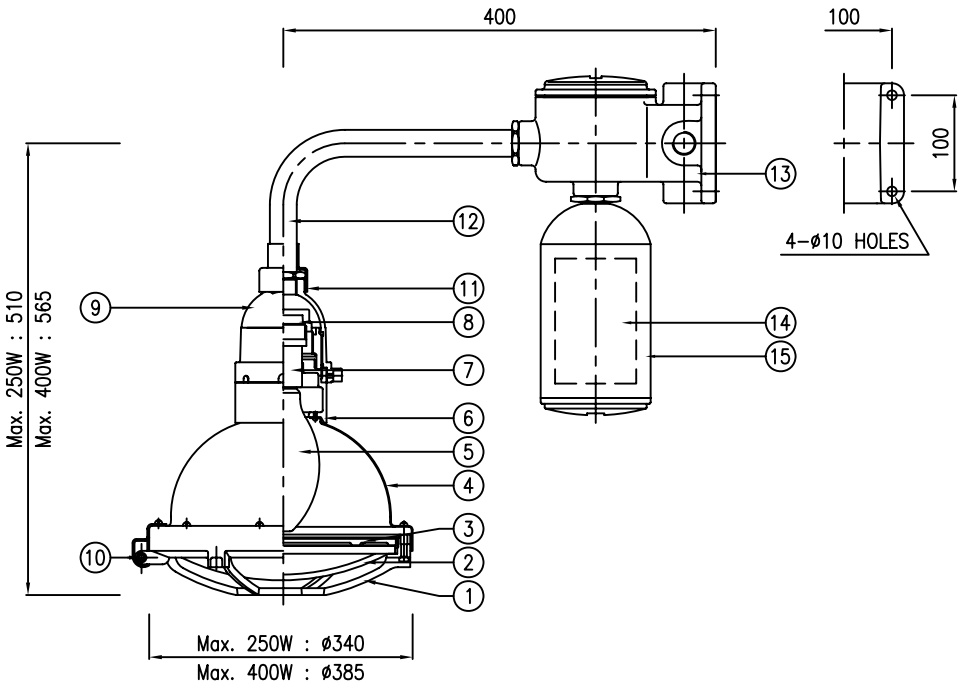

TYPE "_"

SELECTION TABLE

ITEM NO.	LAMP	LAMP SIZE	Q'TY
	☐ MERCURY VAPOR	☐ 150W	SET
		☐ 175W	SET
	☐ H. P. SODIUM	☐ 200W	SET
		☐ 250W	SET
	☐ METAL HALIDE	☐	
		☐ 400W	SET

SUPPLY VOLTAGE	☐ AC110V ☐ AC230V ☐ AC120V ☐ AC240V ☐ AC208V ☐ AC277V ☐ AC220V ☐	FREQUENCY	☐ 50Hz ☐ 60Hz	
HUB SCHEDULE	THREAD	☐ NPT ☐ PF ☐ MM ☐		
	SIZE	☐ 3/4" ☐ 1" ☐ M ☐		
	LOCATION	1 / 2 / 4 / 3	☐ 1-2 ☐ 1-3 ☐ 1-2-3 ☐ 1-2-3-4	
	☐ W/2-BLIND PLUGS ☐ NONE			

NOTE
1.

NO	PARTS	MATERIAL	REMARK
15	BALLAST HOUSING	CARBON STEEL	
14	BALLAST	FOR H.I.D LAMP	HIGH POWER FACTOR
13	MOUNTING BOX	CAST ALUMINIUM ALLOY	
12	SUSPENSION STEM	RIGID STEEL PIPE	
11	WEATHERPROOF CAP	SILICONE RUBBER	
10	HINGE PIN	STAINLESS STEEL ROD	SUS304
9	HOOD	DIE CASTING ALUMINIUM	
8	LAMP HOLDER MTG. PLATE	PHENOL RESIN	
7	LAMP HOLDER	PORCELAIN W/MOGUL SOCKET	E39
6	LAMP HOLDER HOUSING	CAST ALUMINIUM ALLOY	
5	LAMP	H.I.D LAMP	SEE SELECTION TABLE
4	BODY	HIGH GRADE ALUMINIUM SHEET	
3	LOCK RING	DIE CASTING ALUMINIUM	
2	GLOBE	HEAT RESISTANT HARD GLASS	
1	GUARD	DIE CASTING ALUMINIUM	

SCALE	N.S	APPROVED BY	
UNIT	mm	CHECKED BY	
DATE		DRAWN BY	

南北電氣株式會社
NAMBUK ELECTRIC CO.,LTD

TITLE	H.I.D LTG. FIXTURE (BRACKET MTG. TYPE)	APPLICATION AREA	
CAT NO.	SR-L SERIES	CLASS OF PROTECTION	Ex nR II T*
COLOR FINISHING	MUNSELL NO. 7.5BG 6/1.5	DRAWING NO.	NBE-LH-D1-A01

REV.NO.	DATE	DESCRIPTION	REV'D BY	CHE'D BY	APP'D BY
△					
△					
△					

SELECTION TABLE

ITEM NO.	LAMP	LAMP SIZE	Q'TY
	☐ MERCURY VAPOR	☐ 150W	SET
		☐ 175W	SET
	☐ H. P. SODIUM	☐ 200W	SET
		☐ 250W	SET
	☐ METAL HALIDE	☐	
		☐ 400W	SET

SUPPLY VOLTAGE	☐ AC110V ☐ AC230V ☐ AC120V ☐ AC240V ☐ AC208V ☐ AC277V ☐ AC220V ☐	FREQUENCY	☐ 50Hz ☐ 60Hz

HUB SCHEDULE	THREAD	☐ NPT ☐ PF ☐ MM ☐
	SIZE	☐ 3/4" ☐ 1" ☐ M ☐
	LOCATION	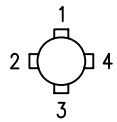 ☐ 1-2 ☐ 1-3 ☐ 1-2-3 ☐ 1-2-3-4
		☐ W/2-BLIND PLUGS ☐ NONE

NOTE
1.

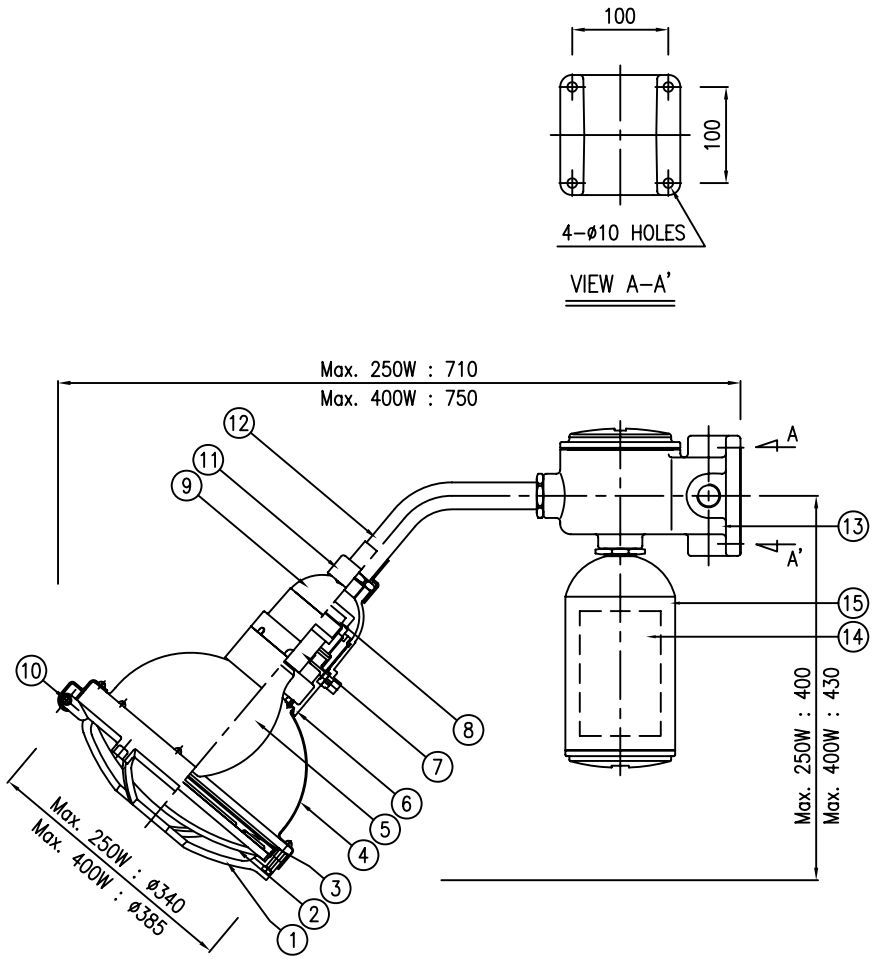

TYPE "_"

NO	PARTS	MATERIAL	REMARK
15	BALLAST HOUSING	CARBON STEEL	
14	BALLAST	FOR H.I.D LAMP	HIGH POWER FACTOR
13	MOUNTING BOX	CAST ALUMINIUM ALLOY	
12	SUSPENSION STEM	RIGID STEEL PIPE	
11	WEATHERPROOF CAP	SILICONE RUBBER	
10	HINGE PIN	STAINLESS STEEL ROD	SUS304
9	HOOD	DIE CASTING ALUMINIUM	
8	LAMP HOLDER MTG. PLATE	PHENOL RESIN	
7	LAMP HOLDER	PORCELAIN W/MOGUL SOCKET	E39
6	LAMP HOLDER HOUSING	CAST ALUMINIUM ALLOY	
5	LAMP	H.I.D LAMP	SEE SELECTION TABLE
4	BODY	HIGH GRADE ALUMINIUM SHEET	
3	LOCK RING	DIE CASTING ALUMINIUM	
2	GLOBE	HEAT RESISTANT HARD GLASS	
1	GUARD	DIE CASTING ALUMINIUM	

SCALE	N.S	APPROVED BY	
UNIT	mm	CHECKED BY	
DATE		DRAWN BY	

南北電氣株式會社
NAMBUK ELECTRIC CO.,LTD

TITLE	H.I.D LTG. FIXTURE (40° BRACKET MTG. TYPE)	APPLICATION AREA	
CAT NO.	SR-L SERIES	CLASS OF PROTECTION	Ex nR II T*
COLOR FINISHING	MUNSELL NO. 7.5BG 6/1.5	DRAWING NO.	NB-ELH-D1-A01

* LENGTH(L) ORDER MADE.

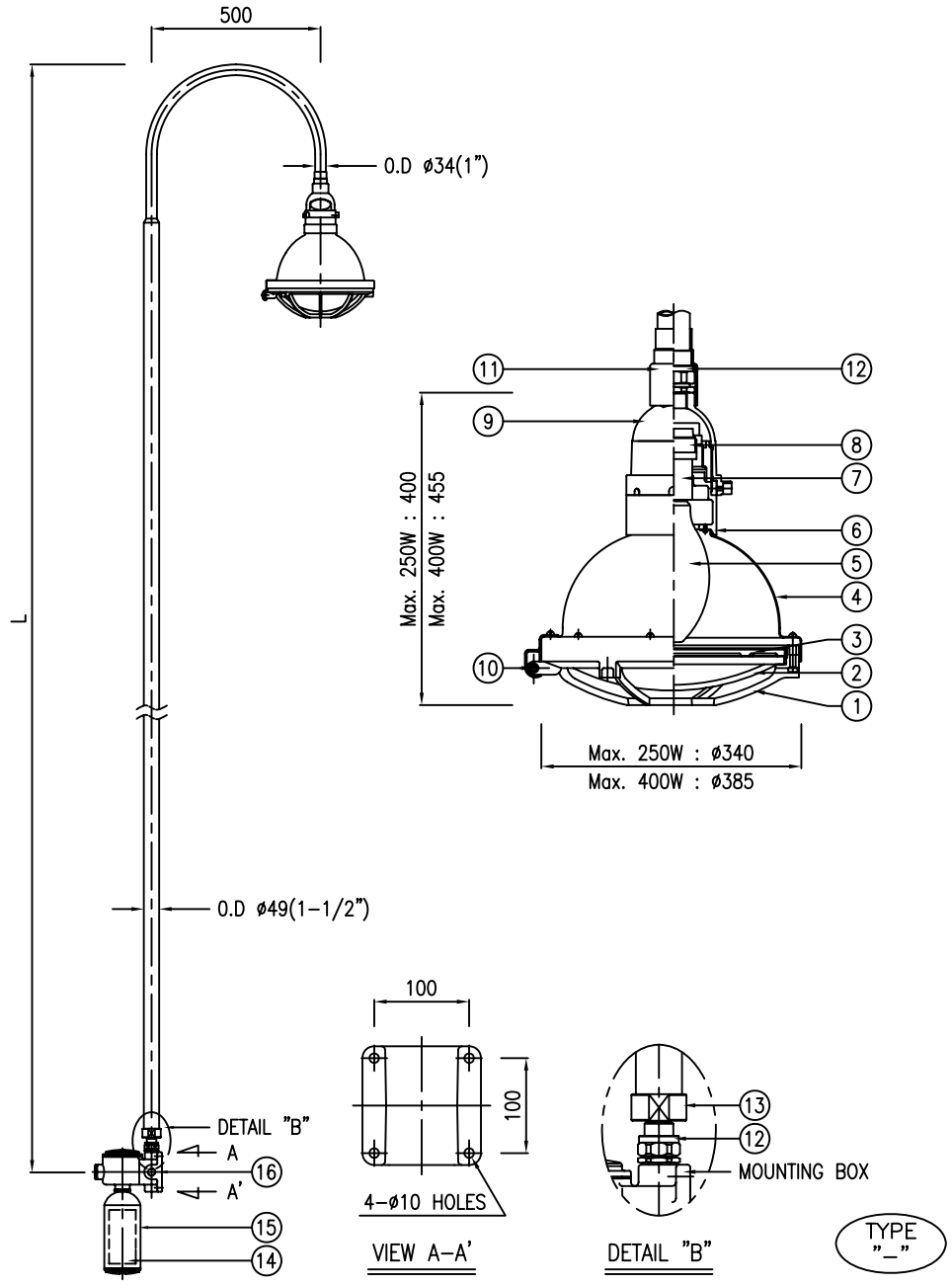

REV.NO.	DATE	DESCRIPTION	REV'D BY	CHE'D BY	APP'D BY
△					
△					
△					

SELECTION TABLE

ITEM NO.	LAMP	LAMP SIZE	Q'TY
	☐ MERCURY VAPOR	☐ 150W	SET
		☐ 175W	SET
	☐ H. P. SODIUM	☐ 200W	SET
		☐ 250W	SET
	☐ METAL HALIDE	☐	
		☐ 400W	SET

SUPPLY VOLTAGE	☐ AC110V ☐ AC230V ☐ AC120V ☐ AC240V ☐ AC208V ☐ AC277V ☐ AC220V ☐	FREQUENCY	☐ 50Hz ☐ 60Hz	
HUB SCHEDULE	THREAD	☐ NPT ☐ PF ☐ MM ☐		
	SIZE	☐ 3/4" ☐ 1" ☐ M ☐		
	LOCATION	POLE (1, 2, 3)	☐ P-1 ☐ P-2 ☐ P-1-2 ☐ P-1-2-3	
		☐ W/2-BLIND PLUGS ☐ NONE		

NOTE
1.

NO	PARTS	MATERIAL	REMARK
16	MOUNTING BOX	CAST ALUMINIUM ALLOY	
15	BALLAST HOUSING	CARBON STEEL	
14	BALLAST	FOR H.I.D LAMP	HIGH POWER FACTOR
13	SOCKET	CARBON STEEL	
12	UNION COUPLING	CARBON STEEL	
11	WEATHERPROOF CAP	SILICONE RUBBER	
10	HINGE PIN	STAINLESS STEEL ROD	SUS304
9	HOOD	DIE CASTING ALUMINIUM	
8	LAMP HOLDER MTG. PLATE	PHENOL RESIN	
7	LAMP HOLDER	PORCELAIN W/MOGUL SOCKET	E39
6	LAMP HOLDER HOUSING	CAST ALUMINIUM ALLOY	
5	LAMP	H.I.D LAMP	SEE SELECTION TABLE
4	BODY	HIGH GRADE ALUMINIUM SHEET	
3	LOCK RING	DIE CASTING ALUMINIUM	
2	GLOBE	HEAT RESISTANT HARD GLASS	
1	GUARD	DIE CASTING ALUMINIUM	

SCALE	N.S	APPROVED BY	
UNIT	mm	CHECKED BY	
DATE		DRAWN BY	

南北電氣株式會社
NAMBUK ELECTRIC CO.,LTD

TITLE	H.I.D LTG. FIXTURE (HAND RAIL TYPE)	APPLICATION AREA	
CAT NO.	SR-L SERIES	CLASS OF PROTECTION	Ex nR II T*
COLOR FINISHING	LTG. FIXTURE : MUNSELL NO. 7.5BG 6/1.5 POLE : HOT DIP GALVANIZED	DRAWING NO.	NB-ELH-D1-A01