surgeZERO : Class II / SACO-E



▲SC040-220S



▲SC040-440D



▲SC040-380Y

- LED 동작상태 표시 기능
- 설치 시 별도의 접속 케이블 필요 없음
- LED indicators for fault and power
- Don't need connection cable for install

Technical data

Model		SC040-XXX		
Electrical characteristics		220S	440D	380Y
Max. continuous operating voltage (AC/DC)	U_C	320V	320V	320V
	U_C (N-PE)	255V	–	255V
Nominal discharge current (8/20)	I_n (L-N/N-PE)	20kA	20kA	20kA
Max. discharge current (8/20)	I_{max} (L-N/N-PE)	40kA	40kA	40kA
Protection level at In	U_p	〈2kV	〈2kV	〈2kV
	U_p (N-PE)	〈2kV	–	〈2kV
Response time	tA (L-N/N-PE)	〈25ns/100ns	〈25ns	〈25ns/100ns
Thermal protection	(L-N)		Yes	
Short-circuit withstand current	I_{SCCR} (L-N)		100kA	

Mechanical characteristics	220S	440D	380Y
Temperature range		-40℃~+80℃	
Mounting		M4 Bolt	
Degree of protection		IP20	
Housing material		Thermoplastic; extinguishing degree UL 94 V-0	
Indication of disconnector operation		Red LED (ON)	
Remote contacts (RC)	–	–	Yes (Option)

SC040-220S 1P2W

Dimension

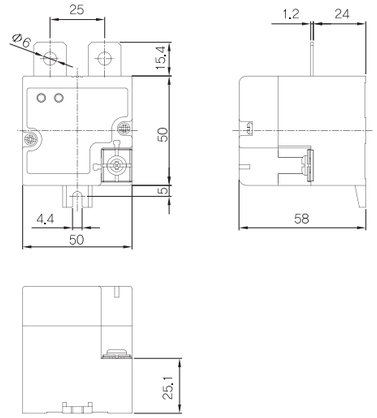

Internal configuration

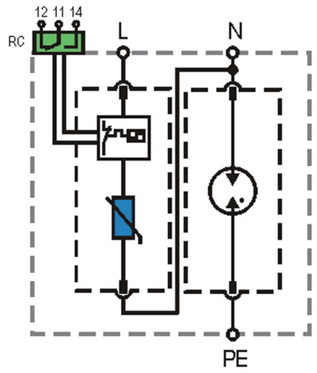

SC040-440D 3P3W

Dimension

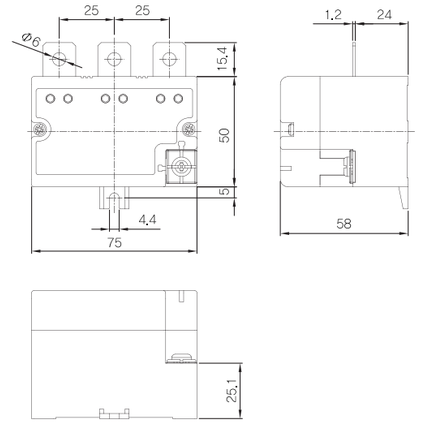

Internal configuration

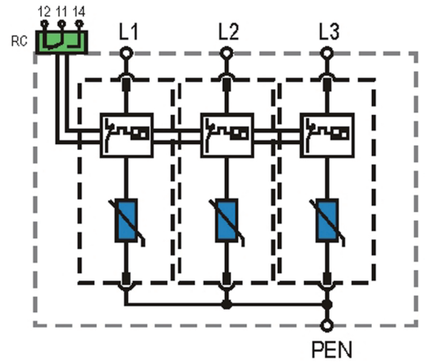

SC040-380Y 3P4W

Dimension

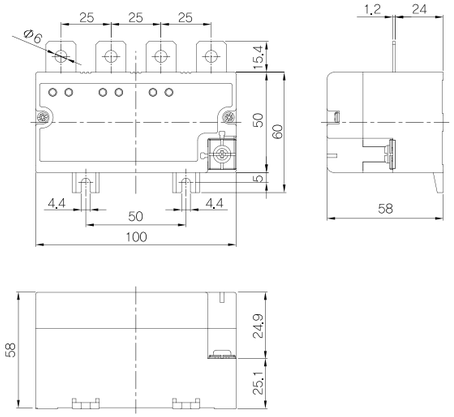

Internal configuration

