Huvitz Upright Microscopes
HRM-300 Series

Dimensions

unit : mm

HRM-300M

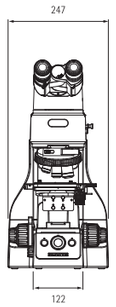

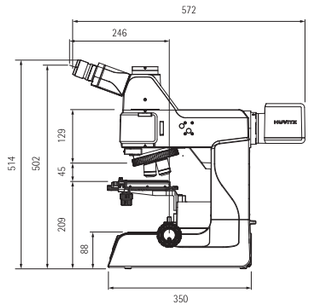

HRM-300

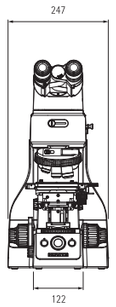

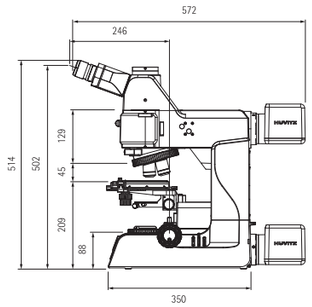

HRM-300 IS 8

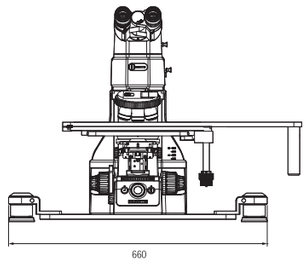

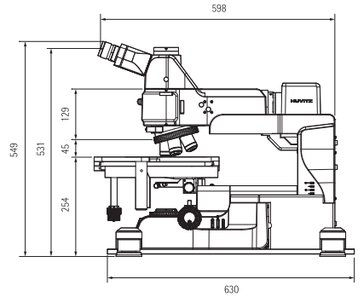

HRM-300 IS 12

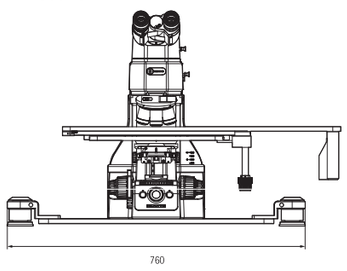

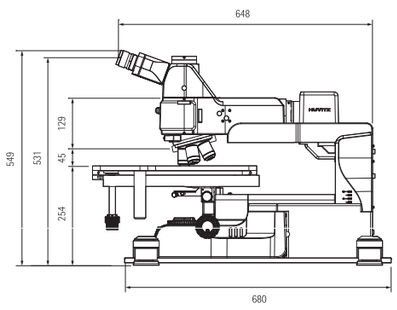



Brightness, Clarity, Beauty.

Huvitz
Upright Microscopes
HRM-300 Series

Huvitz Bldg., 298-29, Gongdan-ro, Gunpo-si,
Gyeonggi-do, 435-862, Korea
Tel:+82-31-442-8868 Fax:+82-31-477-8617
http://www.huvitz.com

Distributed by

Huvitz Re:define, Re+create

HUVITZ OPTILUTION

Integrated with knowledge, technology and creativity, the Huvitz HRM-300 series offers superior optical performance as well as ergonomic design, futuristic digital capability and innovative modules: Huvitz, The Newest Optical Solution.

Huvitz Optical Solution employs perfect optical performance and next generation technology

Superior Optical Performance

The high-performance objective lenses provide excellent clarity in any demanding observation environment.
Now, experience Huvitz optical technology approved by well-known researchers all over the world.

Intelligent and Smart Design

The ergonomic design, compact size, high-quality materials and versatile digital capability ensure minimal operator fatigue during extended periods of operation.

Innovative Module Design

The compact size minimises the installation space.
Interchangeable individual modules meet the needs of any application and you can select the appropriate optional accessory for your task such as a reflected light illuminator, transmitted light illuminator, XY stage, Z-axis, etc.



HRM-300A



HRM-300



HRM-300M

Contents

HRM-300/300M 2
HRM-300A 4
High Performance 6
Intelligent Function 8
Full Automation 10
Large Sample Stages 12
Application Accessories 14
Digital Application 16
System Overview 18
Specifications 20

HRM-300/300M - the ‘Optimum Optical System’ Demonstrates Flexibility in a Vast Number of Inspection Tasks.

Clear and vivid images are provided through the objective lenses and illuminators of the finest quality which have been designed with aspheric lenses.
A variety of observation methods make it easier for the operator to obtain the required images for a range of applications.






Polarizer/Analyzer Filter : HM-25PO / ANR



DIC Filter : HM-DIC

Customizable Optics and Lighting System

Reflected Light Illuminator

The reflected light illuminator provides a variety of observation methods such as BF, BF/DF or DIC to meet all researchers’ needs.

Combined Switch for BF/DF and ND Filter

With the BF/DF converter switch on the front, it is easier to change observation modes as well as the interlocking ND filter, protecting observers’ eyes against dramatic changes of brightness.

A Set of Polarizer and Analyzer Filters

A set of polarizer and analyzer filters help you switch from the DIC/POL to other observation modes quickly and easily.
In addition, the polarizer and analyzer are designed as sliders and are accessible from either side of the microscope.

Optimum DIC provides the highest image quality

Using a DIC slider with a single prism, Huvitz Nomarski DIC observation mode offers easy switching to other observation modes and facilitates observations on any range of magnifications because the position of the DIC prism is not changed.

Transmitted Light System and Condenser

ND6, ND25 and LB filters are built in for the observation of samples via transmitted light.
A variety of condensers are provided, allowing the best possible image clarity for the intended application.

With Innovative Design, the HRM-300A Provides Clear and Accurate Results.

Simple acquisition of 3D images is achievable through Z-axis control.
Accurate 3D measurements and analysis are provided by capturing 2D images combined with software analysis.
The control pad helps with quick and accurate adjustment of the focus.







Control PAD : HR3-PCN

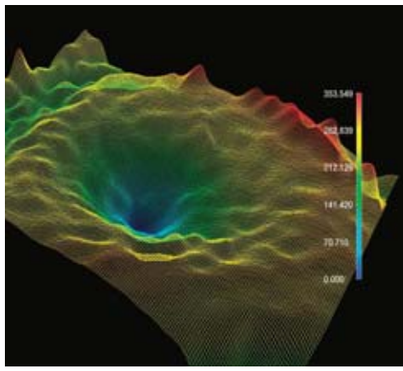

Amazing results generated through the use of a highly accurate, user-friendly 3D Profiling System

Z-Axis Profiler

The Z-axis Autofocus helps simple acquisition of 2D images with samples of varying focal depths.
The Z-axis Profiler features Topographic Analysis and 3D Profiling through our Panasis Software, which generates a composition of all the 2D images into 3D Profiles.

Z-axis Module Specifications

Stroke Distance	30 mm
Resolution	0.01 μm
Repeatability	0.5 μm
Max Speed	1.4 mm/s
Weight	5 kg

Dimensions	W:240 mm
	D:157 mm
	H:202.5 mm
Load capacity	15 kg

Convenient Control Pad

To help check the height at a glance, a display window is positioned in the front.
8 speed-setting for controlling z-axis movement allows for precise and quick focusing.
In addition, a big emergency stop button is also placed on the front to immediately protect samples from unexpected situations.

Excellent Optical Performance Provides High-Resolution Images.

With superior color reproduction, high accuracy, minimal optical loss and zero aberration, you are invited to experience an excellent optical performance, which is comparable or even superior to any leading manufacturers' optical/image quality.
Improved images are guaranteed under any required observation mode.







Trinocular Tube : HM-WETR



Eyepiece : HM-WEPA 10X

From simple measurements to complicated analyses, our excellent optical performance fulfills your needs.

Superior Color Reproduction

The Huvitz advanced optical design and lens coating technology create semi-apochromatic objective lenses.
These lenses offer improved resolution and superior color reproduction that are faithful to the original samples.

Complete Removal of Aberration and Flare-Free

Plan semi-apochromat objective lenses offer the world's best image quality with the spherical aberration correction.
Flare is minimized by anti-reflective processing inside the objective lenses.

Accurate Parcentric Objective Lenses

Decentration occurs when using different magnification objective lenses. This is minimized by the improved precision-processed objective lenses and nosepiece.
The image is kept within the center of view even when observing with a digital camera.

Comfortable Eyepiece

In order to reduce eyestrain, the HRM-300 eyepieces have an extra wide 25mm field number(F.N.).
The 20° angled head provides a comfortable viewing position.
In addition, the prism is designed to minimize the optical loss.

Convenient and Intelligent Features. Enhanced Work Performance and Operator Satisfaction.

The adaptable new features ensure that any potential future requirements can be fulfilled with ease. The optimised system and various digital functions enable routine tasks to be carried out efficiently and effectively.





ECO, IL, Illumination Indicator


Focusing Knob



High speed, high efficiency and intelligent functionality from our latest digital technology

Convenient, Multi-Function Illumination Selection Knob

Work efficiency and convenience are enhanced by the development of a versatile selection knob combining all the functions for engaging reflected/transmitted illumination as well as brightness control.

Illumination Selection Indicator

Reflected/Transmitted Illumination, Max/Min-Brightness, ECO On/Off and Z-axis position can be checked easily at a glance and any wrong selections, which could occur during the operation, are minimized.

Environment-Friendly ECO Function

When an operator is absent temporarily from the work, the auto-power saving mode is enabled to protect your samples from the heat of the illuminator, energy is saved and the lamp lifetime is extended.
(The sleep mode time is adjustable with Panasis S/W)

Constant Brightness of IL

The working efficiency is increased by providing optimized constant lighting brightness to the images - even if the observation magnifications are changed during the operation of the microscope.

Convenient, Automated Magnification Display with the 'ME'

The current working magnification is displayed automatically and the auto-calibrated value is measured through Panasis S/W.

Full Automation
Increased Speed and Less Effort.

Automatically and precisely controlled nosepiece, XY stage and Z-axis operation will take workload off the operator and makes things quicker and easier. Working with the microscopes become more efficient with accessories and software features function that broaden the range of applications that can be covered.



X,Y-axis Motorized Stage



3 Step Observation


Motorized Nosepieces



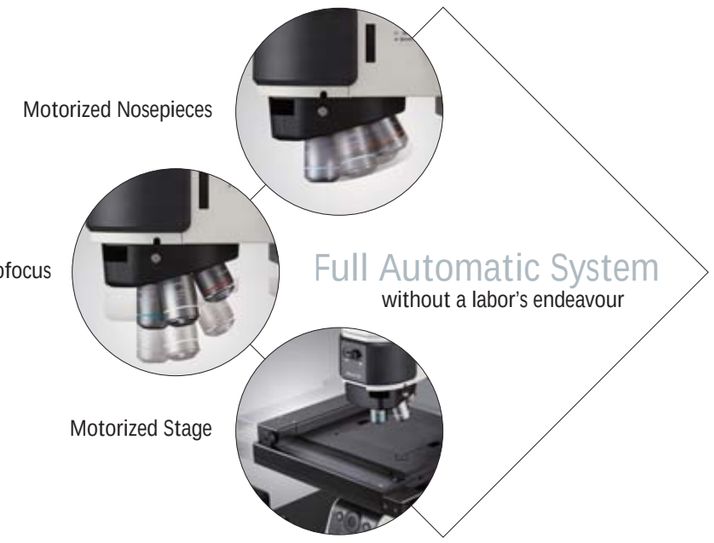

More satisfying inspection microscope with the convenience of automated adjustments and a huge range of observation methods.

Motorized Revolving Nosepieces

The motorized nosepiece increases the speed of the workflow making the microscope more convenient to work with.
It is very efficient with selectable adjustment methods based on user's needs. (Software, frame button and controller)

Motorized Stage with image stitching

- Auto-tiling function: acquires sets of images in a consecutive order and automatically stitches them in real time.
- Navigation function: automatic navigation with a click on a tiled image.
- Location information application: supports large area examination.

Fluorescence Observation

The microscope supports fluorescence observation with a special illumination module and fluorescence filter cubes Bright field and dark field illumination remains available.
A useful feature when photo resist residue and organic particles are studied.

Simultaneous reflected and transmitted light Lights

The microscope comes with reflected light and transmitted light illuminations simultaneously.

Vibration isolation

The microscope can be installed stably in any environment.
The vibration isolation frame prevents distorted images during high-resolution imaging.

Large Sample Stages
Improved efficiency through increased size

The large sample makes the microscope even more versatile.
Samples up to 350X300mm and 20mm thickness and 2kg can easily be examined.



Measuring microscope



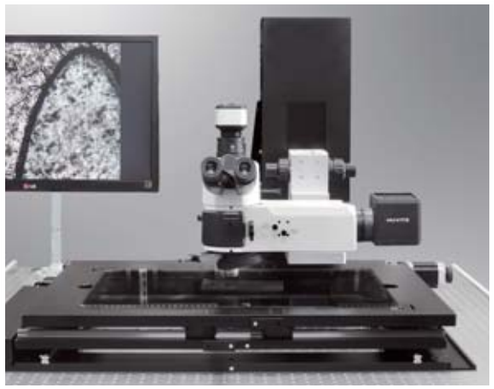


HSIA Module

An inspection microscope that provides the convenience of large stages and efficiency of extend devices.

Large Size Stage

Stages in sizes of 400X300mm and 250X150mm provide the best efficiency to examine samples in various sizes.
The automated stage with its built-in power system can be controlled via the joystick and software providing convenient features such as auto-tiling.
The manual stage can also be controlled in micro-motion using a clutch mechanism, the manual XY handle and the ergonomic design reduces fatigue during longer-term imaging sessions.

HSIA Module

A module to operate Z-axis electronically by applying illumination module on a structure other than the body of our inspection microscope.
It is easily applicable in a customized software environment.

Customized System

The microscope can be customized to meet special requirements in certain fields. (Images above)

A Wide Range of Accessories Handle the Widest Variety of Inspection Tasks - Amazing Flexibility.

A broad selection of enhanced performance accessories accommodates a large variety of inspection needs and allows you to optimize the accuracy of your analysis results.
Easy conversion maximizes the work efficiency.

HR-ST 6X4R



HR-ST4R and HR-SPL4



HR-ST3R and HR-SHDR



Nosepiece : HM-D5BDRE / HM-D5RE



Condenser : HR-ACD



Lamp Housing : HM-LH100

On the same stage, a wide variety of samples can be observed effectively with the range of useful accessories.

Providing multi-functional stages for a variety of samples

To accommodate the various sizes of samples from 300mmX400mm to 600mmX600mm, a wide range of stages are available.
And they facilitate a great diversity of sample applications from a Wafer Holder to a Glass Plate for transmitted observation.

Free Magnification Convertible Revolver

The precision-machined Revolvers providing BF, BF/DF or DIC allow the most efficient inspections by maximizing the Parcentricity of objective lenses and keeping the center of images in place even when the objective lenses changed from the lowest to the highest magnification.

Long Lifetime Powerful Lamp Housing

The collector lens is designed to optimize the Koehler illuminator's performance providing 12V 100W halogen light source so that its light can cast brightly and evenly on the samples.

Efficient Transmitted Illumination and Condenser

With aspheric lenses deployed optical loss is minimized.
It is possible to apply the illumination to a wide range of samples with the provision of an Abbe condenser (NA:1.25) and LWD(NA:0.65).

Creative Imaging Solution Demonstrating Superior Image Processing Capability.

Working efficiency is improved through a user-friendly interface, superior image processing, fast image processing in conjunction with a variety of measuring tools.



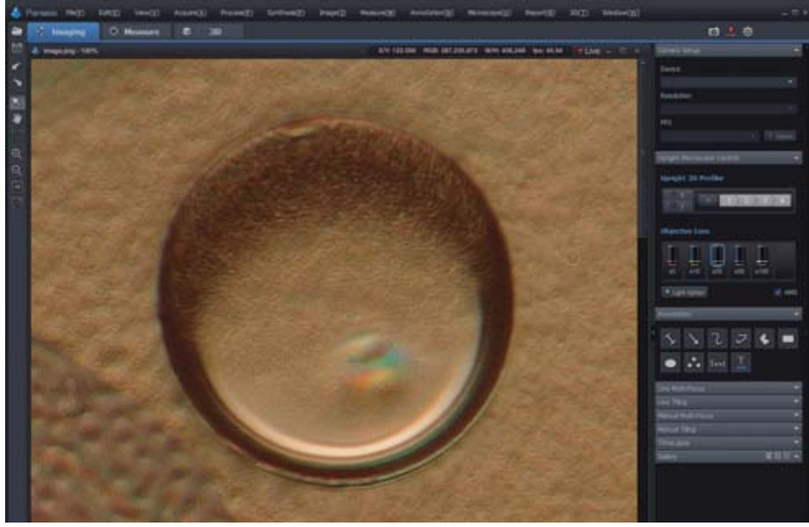



Lusis Digital Camera



TV-Ports : HM-TV0.35XC / HM-TV0.5XC / HM-TV1XC

Powerful, stable and convenient measurement and analysis software suitable for all user environments

Advanced Panasis ST

Panasis ST, is optimized to work smoothly and smartly with Huvitz Microscope HRM-300 series.
It is professional software applicable to the microscopy research and inspection environments. In addition, working efficiency and stability are improved by the 3 Way Solution.

- 3 Way Solution Device Auto On/Off Alarm/ One-Push Backup and Recovery/Remote Network Costumer Service Support

Fast and Convenient Live Multi-Focus

All the images, which have intrinsic depth of focus for each image, can be combined into a fully-focused image in real time by adjusting the focus through the height of sample using the Z-axis controller so that all the fields can be seen clearly.

Realistic Live Tiling

Live Tiling is a useful function for you to obtain a wide panorama image composed of several images captured while moving X/Y-stage.
You can tile the adjoining fields extending the microscope's field of view in real time as you need.

Professional LUSIS Digital Camera

Lusis Digital Camera is created to maximize the image reproduction faithfully to the original samples and enables the image quality be more improved.

System Overview

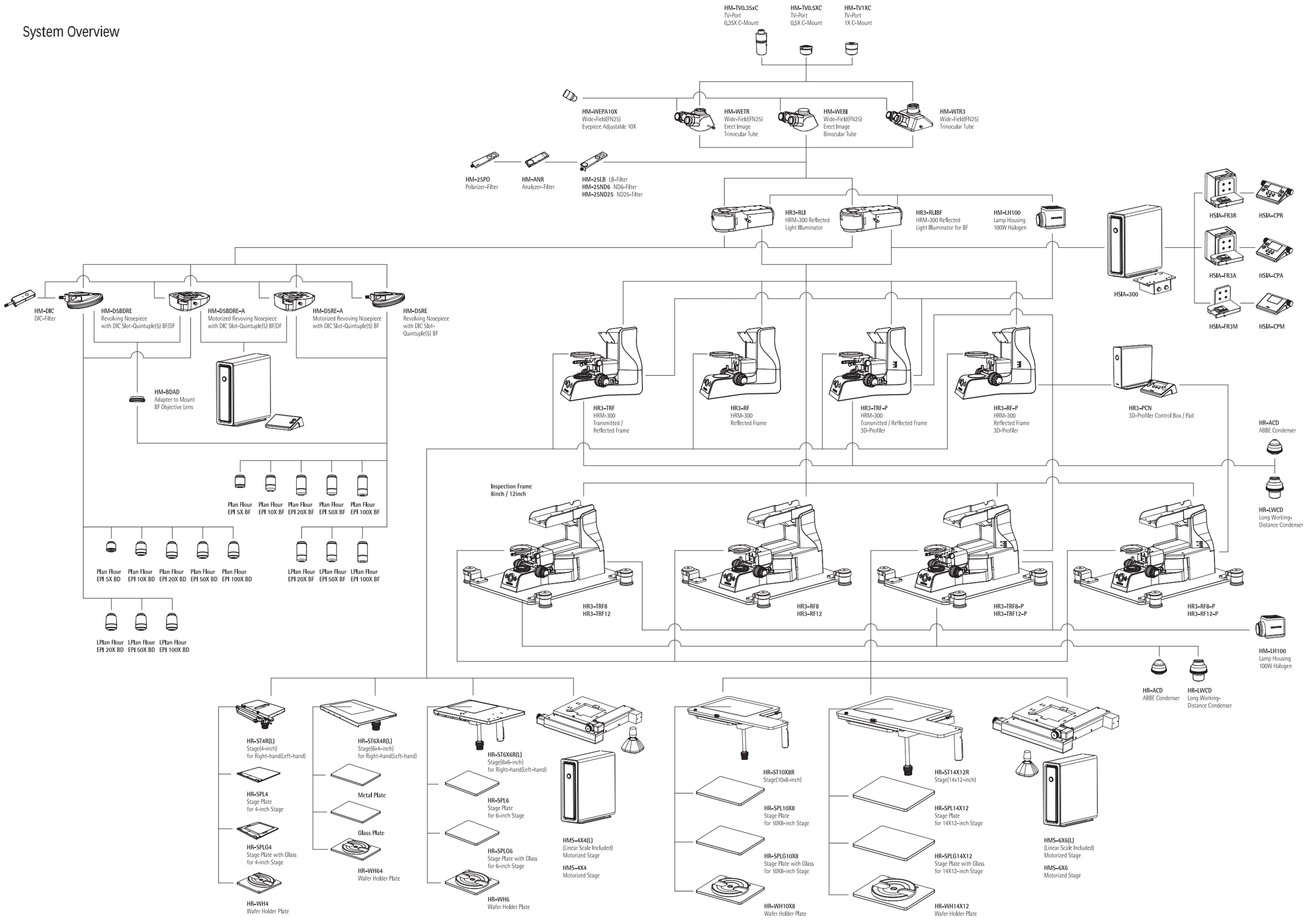

Specifications

		HRM-300	HRM-300M
Optical System		Infinity-Corrected Optical System	
Illumination		Reflected / Transmitted	Reflected
Base unit	Focus	Stroke range: 29.5 mm Coarse and Fine focusing knob Coarse: 17.7 mm/revolution Fine: 0.1 mm/revolution (1 μm scale) Upper limit stopper, Torque adjustment ring	
	Electronics	Integrated power supply for 12V 100W light adjustment. LED voltage indicator IL switch and ECO switch	
Reflected Illumination	BF/DF	HR3-RLI: Kohler illumination system Brightfield / Darkfield, Normaski DIC, Polarized light	
	BF	HR3-RLIBI: Kohler illumination system Brightfield, Normaski DIC, Polarized light	
	Light source	HM-LH100: 12V 100W halogen	
Transmitted Illumination		Kohler illumination system Brightfield Built-in filters (ND6, ND25, LB)	-
	Light source	HM-LH100: 12V 100W halogen	
Condenser	Abbe	HR-ACD: N.A 1.20	-
	Long-working	HR-LWCD: N.A 0.65	
Stage	4X4 inch	HR-ST4R: metal plate, glass plate Size 210(W) X 170(D) mm Stroke 104(X) X 102(Y) mm	
	6X4 inch	HR-ST6X4R: metal plate, glass plate Size 299(W) X 193(D) mm Stroke 154(X) X 104(Y) mm	
	6X6 inch	HR-ST6X6R: metal plate, glass plate Size 300(W) X 280(D) mm Stroke 153(X) X 153(Y) mm	
	10X8 inch	HR-ST10X8R: metal plate, glass plate Size 610(W) X 319(D) mm Stroke 255(X) X 205(Y) mm	
	14X12 inch	HR-ST14X12R: metal plate, glass plate Size 710(W) X 419(D) mm Stroke 356(X) X 305(Y) mm	
Observation Tube	Trinocular	HM-WETR: Erect type(F.N 25), Incline angle 20°	
	Binocular	HM-WEBI: Erect type(F.N 25), Incline angle 20°	
Eyepieces		HM-EPA10X: 10X(F.N 25), Diopter adjustable	
	Reticle	Crosshair, X-micrometer, XY-micrometer, Grid	
Revolving Nosepiece	BF/DF	HM-D5BDRE: 5-position Nosepiece for Dark-field objective lens with DIC slot	
	BF	HM-D5RE: 5-position Nosepiece for Bright-field objective lens with DIC slot	
Dimensions		Approx. 246(W) X 572(D) X 514(H) mm	
Weight		Approx. 19 kg	

Objective Lens

Objective Lens	Magnification	Numerical Aperture	WD(mm)	Resolution(μm)
PlanFluor EPI	5X	0.15	20	2.24
	10X	0.30	11	1.12
	20X	0.45	3	0.75
	50X	0.80	1	0.42
	100X	0.90	1	0.37
PlanFluor EPI-BD	5X	0.15	20	2.24
	10X	0.30	11	1.12
	20X	0.45	3	0.75
	50X	0.80	1	0.42
	100X	0.90	1	0.37
LPlanFluor EPI	20X	0.40	12.0	0.84
	50X	0.50	10.6	0.67
	100X	0.80	3.3	0.42
LPlanFluor EPI-BD	20X	0.40	12.0	0.84
	50X	0.50	10.6	0.67
	100X	0.80	3.3	0.42

3D Profile Module for HRM-300A

Mechanism	High-resolution 5-phase stepping motor, Long cross-roller guide system
Stroke Distance	30 mm
Resolution	0.01 μm
Repeatability	0.5 μm
Max Speed	1.4 mm/sec
Dimensions	240(W) X 157(D) X 202.5 (H) mm
Weight	5 kg
Load capacity	15 kg

HSIA

Reflected Light Illuminator Control System	HSIA-300		
Reflected Light Illuminator	HR3-RLI, HR3-RLIBF (Infinite-corrected optical system)		
Frame unit	HSIA-FR3M	HSIA-FR3A	HSIA-FR3R
Focusing Module	None	Motorized focusing module Cross-roller guide system - Stroke: 30mm - Resolution: 0.01μm - Repeatability: 0.5μm - Max, speed: 1.4mm/sec	
Revolving Nosepiece	Manual type HM-D5BDRE (BF/BD) HM-D5RE (BF only)		Auto type HM-5BDRE-A (BF/BD) HM-5RE-A (BF only)
Load Capacity	15kg		
Weight (Frame only)	1.2kg	4.0kg	
Control Pad	HSIA-CPM	HSIA-CPA	HSIA-CPR
	Brightness adjustment	Brightness adjustment Focus adjustment	Brightness adjustment Focus adjustment Automatic revolving nosepiece
Electronics	Rating: 100-240V~ 50/60Hz 4.0-2.2A		
Weight (Control Box, Pad)	6.9kg		

Designs and details can be changed without prior notice for the purposes of improvement.