Product Catalog
Directional Coupler





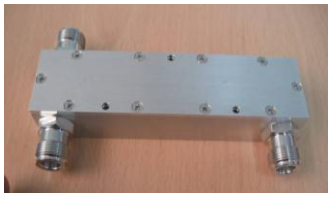







LINKTEK

INDEX

Model Name

◈ N Directional Coupler , 700 ~ 2700 MHz

◈ 20dB Dual Directional Coupler , 800 ~ 2400 MHz

◈ 7dB Directional Coupler , 824 ~ 2655 MHz

◈ 10dB Directional Coupler , 824 ~ 2655 MHz

◈ DIN-POWER-TAPPER

◈ N-POWER-TAPPER

Product Specifications

N Directional Coupler , 700 ~ 2700 MHz



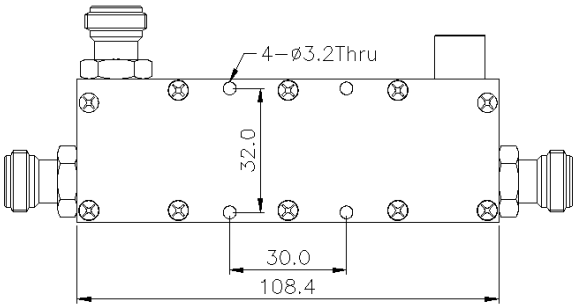

CHARACTERISTICS **DIMENSION(Unit : mm)**

General Specifications

Device Type	Coupler
Interface	N Female

Electrical Specifications

Operating Frequency Band	700 ~ 2700 MHz						
Impedance	50 ohm						
Return Loss	20 dB						
VSWR	1.2 : 1						
Coupling	-5 dB ± 1	-6 dB ± 1	-8 dB ± 1	-10 dB ± 1	-15 dB ± 1	-20 dB ± 1	-30 dB ± 1
Insertion Loss	-2.3 dB	-1.7 dB	-1.2 dB	-0.8 dB	-0.4 dB	-0.25 dB	-0.2 dB
Isolation	-25dB	-26 dB	-28 dB	-30 dB	-35 dB	-40 dB	-50 dB
3rd Order IMD	-140 dBc (relative tocarrier)						
3rd Order IMD Test Method	Two +43 dBm carriers						
Average Power, maximum	100 W						
Peak Power, maximum	1 kW						
Reflected Power, maximum	100 W						
Operating Temperature / Humidity	-30°C to +60 °C / Up to 95%						

Mechanical Specifications

Inner Contact Plating	Silver
Outer Contact Plating	SUCO

TEL : 82-31-314-0078 • FAX : 82-31-314-0079 • http://www.linktek.biz • E-mail:linktek@linktek.biz

Product Specifications

20dB Dual Directional Coupler , 800 ~ 2400 MHz

LCPPM7720-C1



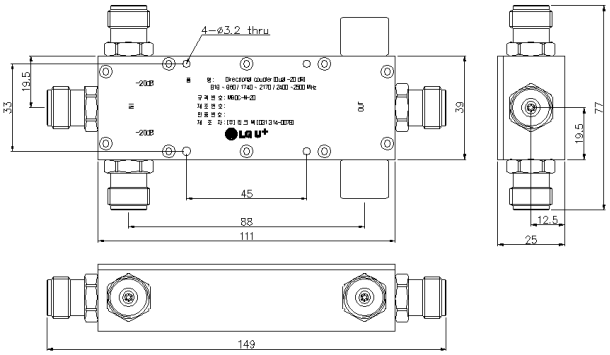

CHARACTERISTICS **DIMENSION(Unit : mm)**

General Specifications

Device Type	Dual Coupler
Interface	N Female

Electrical Specifications

Operating Frequency Band	800 ~ 2400 MHz
Impedance	50 ohm
Return Loss	20 dB
VSWR	1.2 : 1
Coupling	-20 dB ± 1.0 dB
Insertion Loss	-0.3 dB (max.)
Isolation	40 dB
3rd Order IMD	-140 dBc (relative tocarrier)
3rd Order IMD Test Method	Two +43 dBm carriers
Average Power, maximum	200 W
Peak Power, maximum	1 kW
Reflected Power, maximum	200 W
Operating Temperature / Humidity	-40℃ to +70 ℃ / Up to 95%

Mechanical Specifications

Inner Contact Plating	Silver
Outer Contact Plating	SUCO
Ingress Protection Test Method	IEC 60529:2001, IP65

TEL : 82-31-314-0078 • FAX : 82-31-314-0079 • http://www.linktek.biz • E-mail:linktek@linktek.biz

Product Specifications

7dB Directional Coupler , 824 ~ 2655 MHz

LCPPM8807-A1



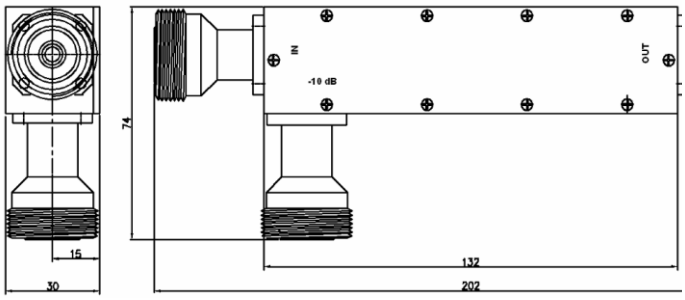

CHARACTERISTICS **DIMENSION(Unit : mm)**

General Specifications

Device Type	Coupler
Interface	7/16 DIN Female

Electrical Specifications

Operating Frequency Band	824 ~ 2655 MHz
Impedance	50 ohm
Return Loss	20 dB
VSWR	1.2 : 1
Coupling	-7 dB ± 1.0 dB
Insertion Loss	-1.4 dB (max.)
Isolation	25 dB
3rd Order IMD	-140 dBc (relative tocarrier)
3rd Order IMD Test Method	Two +43 dBm carriers
Average Power, maximum	200 W
Peak Power, maximum	1 kW
Reflected Power, maximum	60 W
Operating Temperature / Humidity	-40℃ to +70 °C / Up to 95%

Mechanical Specifications

Inner Contact Plating	Silver
Outer Contact Plating	SUCO
Ingress Protection Test Method	IEC 60529:2001, IP65

TEL : 82-31-314-0078 • FAX : 82-31-314-0079 • http://www.linktek.biz • E-mail:linktek@linktek.biz

Product Specifications

10dB Directional Coupler , 824 ~ 2655 MHz

LCPPM8810-A1



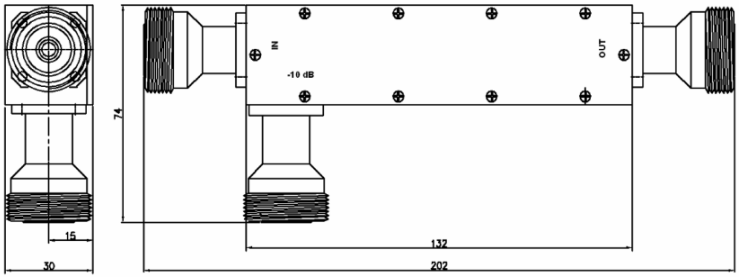

CHARACTERISTICS **DIMENSION(Unit : mm)**

General Specifications

Device Type	Coupler
Interface	7/16 DIN Female

Electrical Specifications

Operating Frequency Band	824 ~ 2655 MHz
Impedance	50 ohm
Return Loss	20 dB
VSWR	1.2 : 1
Coupling	-10 dB ± 1.0 dB
Insertion Loss	-0.8 dB (max.)
Isolation	30 dB
3rd Order IMD	-140 dBc (relative tocarrier)
3rd Order IMD Test Method	Two +43 dBm carriers
Average Power, maximum	200 W
Peak Power, maximum	1 kW
Reflected Power, maximum	100 W
Operating Temperature / Humidity	-40℃ to +70 °C / Up to 95%

Mechanical Specifications

Inner Contact Plating	Silver
Outer Contact Plating	SUCO
Ingress Protection Test Method	IEC 60529:2001, IP65

TEL : 82-31-314-0078 • FAX : 82-31-314-0079 • http://www.linktek.biz • E-mail:linktek@linktek.biz

Product Specifications

Din Power Tapper (AIR LINE) , 700 ~ 2700 MHz

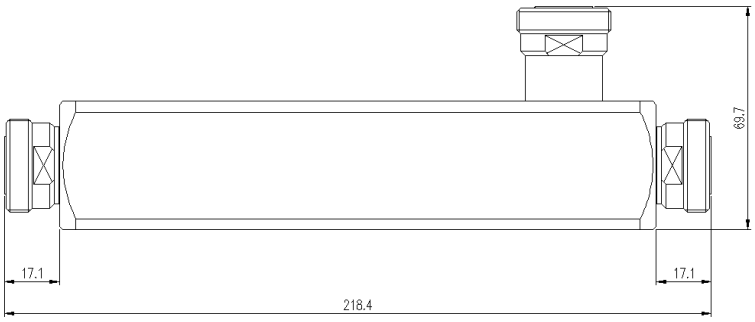

DIMENSION(Unit : mm)

General Specifications

Device Type	Tapper
Interface	7/16 DIN Female

Electrical Specifications

Operating Frequency Band	700 ~ 2700 MHz						
Impedance	50 ohm						
Return Loss	16.6 dB						
VSWR	1.4 : 1						
Coupling	-5 dB ± 1	-6 dB ± 1	-7 dB ± 1	-10 dB ± 1	-15 dB ± 1	-20 dB ± 1	-30 dB ± 1
Insertion Loss	-1.8 dB	-1.3 dB	-1.0 dB	-0.6 dB	-0.2 dB	-0.2 dB	-0.2 dB
3rd Order IMD	-150 dBc (relative tocarrier)						
3rd Order IMD Test Method	Two +43 dBm carriers						
Average Power, maximum	200 W						
Peak Power, maximum	1 kW						
Reflected Power, maximum	100 W						
Operating Temperature / Humidity	-40℃ to +70 ℃ / Up to 95%						

Mechanical Specifications

Inner Contact Plating	Silver
Outer Contact Plating	SUCO
Ingress Protection Test Method	IEC 60529:2001, IP65

TEL : 82-31-314-0078 • FAX : 82-31-314-0079 • http://www.linktek.biz • E-mail:linktek@linktek.biz

Product Specifications

N Power Tapper (AIR LINE) , 380 ~ 2700 MHz

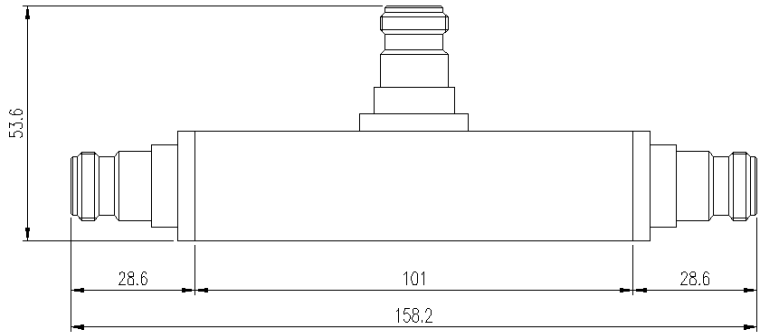

DIMENSION(Unit : mm)

General Specifications

Device Type	Tapper
Interface	N Female

Electrical Specifications

Operating Frequency Band	380 ~ 1550 , 1650 ~ 2700 MHz						
Impedance	50 ohm						
Return Loss	16.6 dB						
VSWR	1.4 : 1						
Coupling	-5 dB ± 1	-6 dB ± 1	-7 dB ± 1	-10 dB ± 1	-15 dB ± 1	-20 dB ± 1	-30 dB ± 1
Insertion Loss	-1.8 dB	-1.3 dB	-1.0 dB	-0.6 dB	-0.2 dB	-0.2 dB	-0.2 dB
3rd Order IMD	-150 dBc (relative tocarrier)						
3rd Order IMD Test Method	Two +43 dBm carriers						
Average Power, maximum	200 W						
Peak Power, maximum	1 kW						
Reflected Power, maximum	100 W						
Operating Temperature / Humidity	-40℃ to +70 ℃ / Up to 95%						

Mechanical Specifications

Inner Contact Plating	Silver
Outer Contact Plating	SUCO
Ingress Protection Test Method	IEC 60529:2001, IP65

TEL : 82-31-314-0078 • FAX : 82-31-314-0079 • http://www.linktek.biz • E-mail:linktek@linktek.biz