DOOSAN

Optimal Solutions for the Future

NHM series

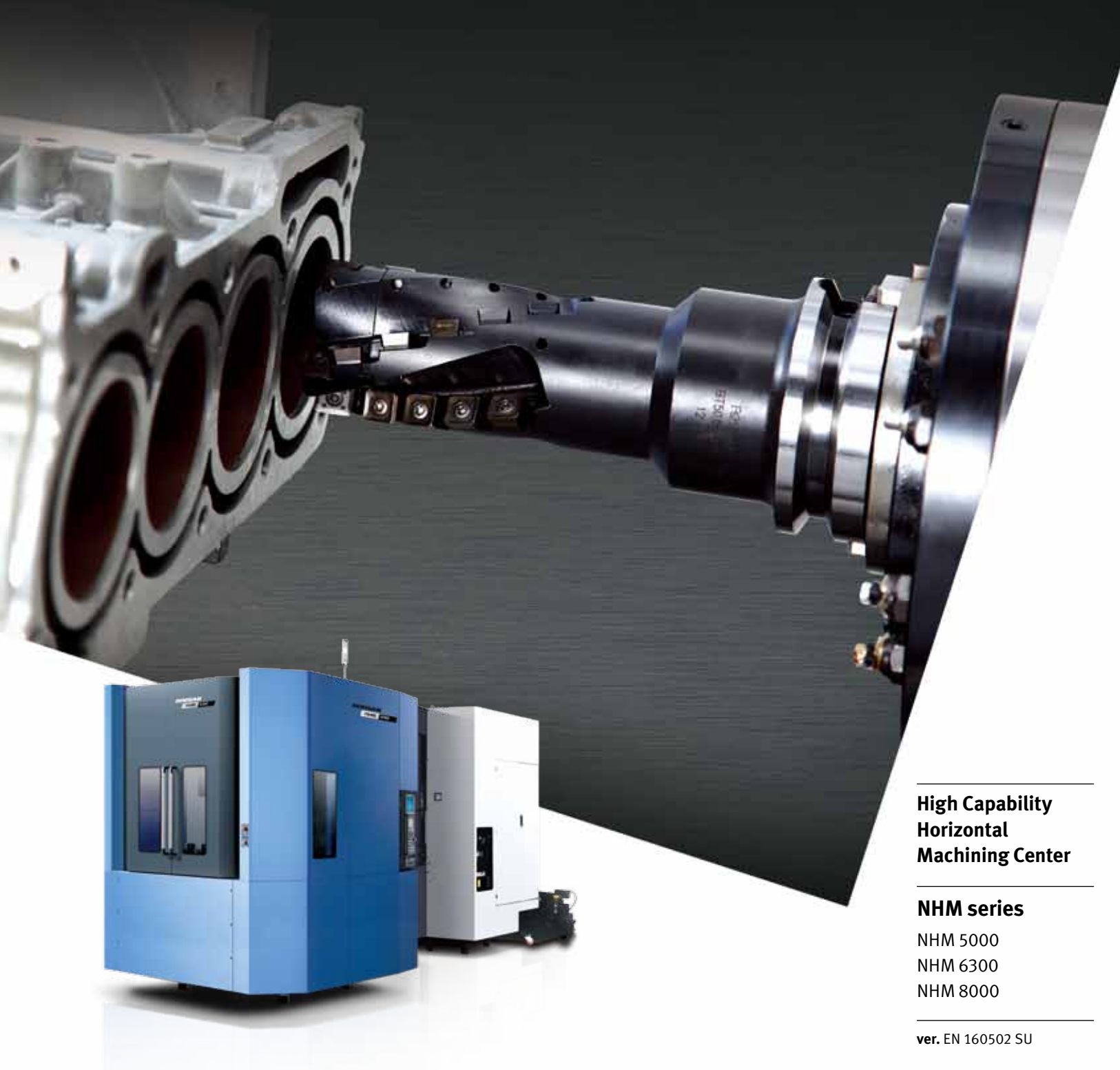

High Capability Horizontal Machining Center

NHM series

NHM 5000
NHM 6300
NHM 8000

ver. EN 160502 SU

Basic Information

Basic Structure
Cutting
Performance

Detailed Information

Options
Applications
Capacity Diagram
Specifications

Customer Support Service



NHM series

NHM Series provides the largest machining specifications and production capabilities in its class including powerful cutting capabilities for satisfying diversified needs for production of customers. The integrated structure of the box-type guideway is the optimal structure of excellent production capabilities for machining various materials from common parts to metal hard of cutting with its high rigidity capacity required for powerful cutting process. In addition, replacement speed of tools and palettes at servo motor driving for keeping non-cutting time minimal improves reliability and productivity.



Contents

02 Product Overview

Basic Information

04 Basic Structure
09 Cutting Performance

Detailed Information

10 Standard / Optional Specifications
12 Applications
19 Capacity Diagram
24 Machine / NC Unit Specifications

26 Customer Support Service

High Rigidity One-Piece Bed

The high rigidity one-piece bed supports heavy duty cutting with the adoption of Finite Element Method (FEM) analysis.

High Productivity and Reliability

The servo-driven automatic tool changer (ATC) and automatic pallet changer improve parts durability and maintainability, leading to improved product quality. Compatibility with the pallet extension system and minimized idle time ensure even higher productivity.

User-Friendly Functions

Various new user-friendly functions have been introduced to reduce the operator's work load

Machine Structure

The machine of one-piece structure of the bed and the column yields high productivity.

High Rigidity Bed Structure

NHM Series is designed for keeping high stability and durability intact through FEM technologies; the series ensures continuous powerful cutting power with the structure applied with M- and W-type ribs.

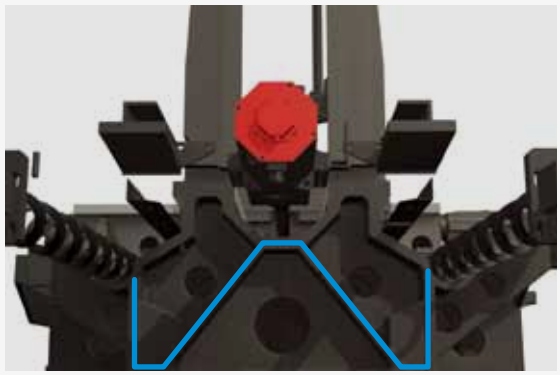

W-type rib

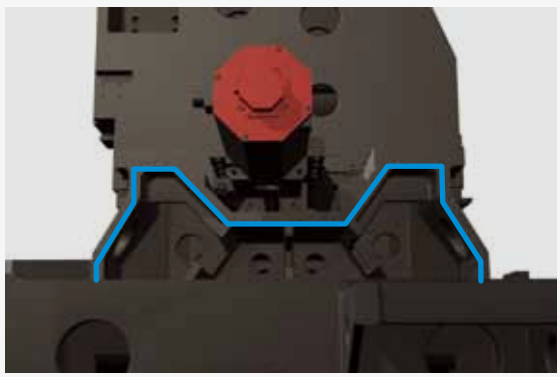

M-type rib

Double-Wall Configuration

The main body of the system is designed in double wall structure for preventing leak of cutting oil: This design allows easy maintenance and improves productivity as well.

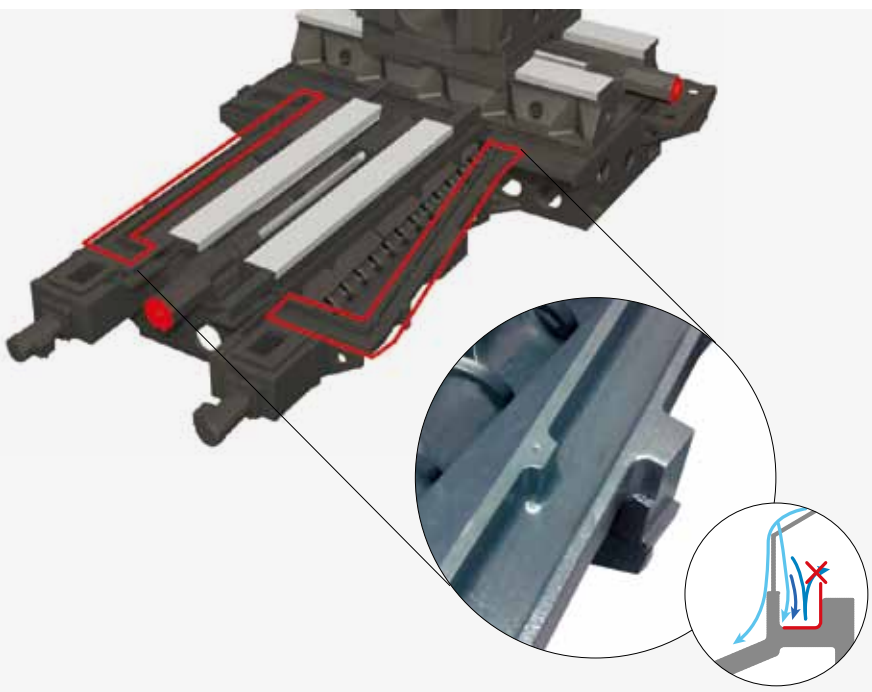

Travel Axis

High rigidity is realized with the wide box-type guideway.

Strong Feed Axis Structure

The extended box-type guideways are applied to all of the axes for providing higher rigidity, and the optimal dynamic rigidity of the main sliding parts further improve capabilities of strong cutting.

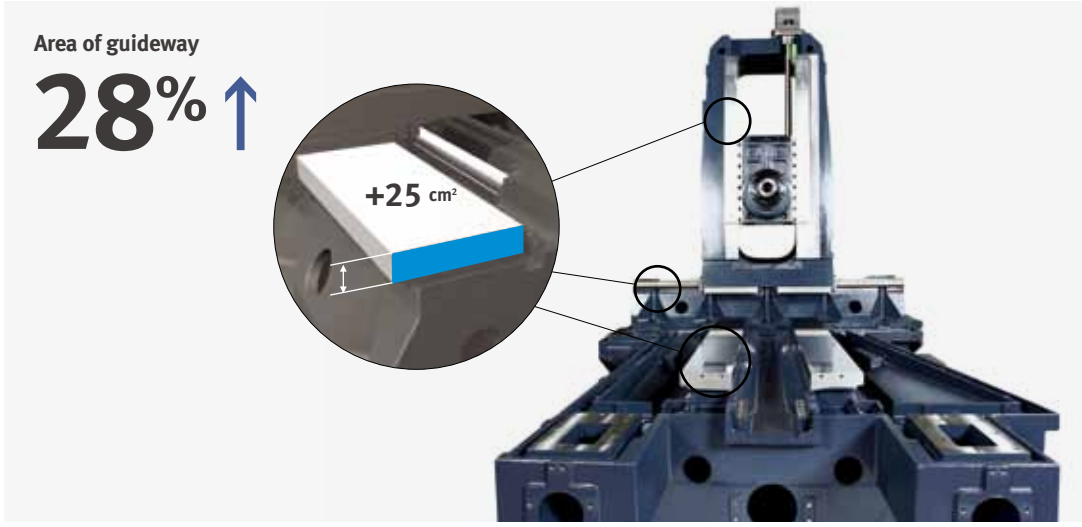

Half-Floating Air Structure of Feed System

The half-floating air structure mitigates friction resistance during feed along the X axis resulted form the mass of the spindle and the column for improving accuracy of positioning and repeatability.

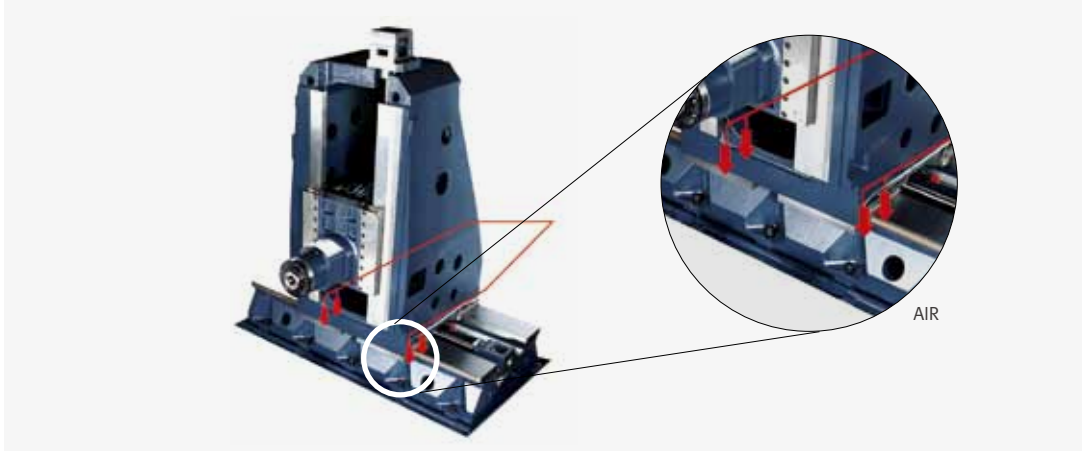

Powerful Ball Screw and Thermal Displacement Control

The 3-row bearing applied with the rigid coupling keeps precision and rigidity for individual axes high, and high accuracy is implemented by controlling thermal displacement by the ball screw locking devices and the nut cooling system on the all of the axes.

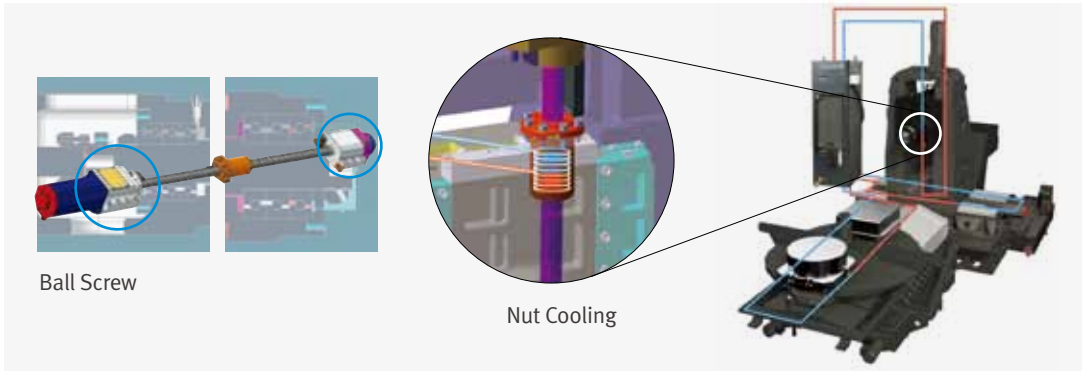

Spindle

The high power gear-driven spindle of NHM Series yields excellent rigidity for diverse materials.

Powerful Spindle

Designed to minimize vibration and thermal error while offering rapid acceleration and deceleration, the spindle guarantees excellent cutting performance from steel to nonferrous metal parts



Model	Rotation rate r/min	Output kW (Hp)	Torque N·m (ft-lb)	Specification
NHM 5000	6000	15 / 25 (20.1 / 33.5)	1034 (25.8)	ISO #50
NHM 6300		22/ 35 (29.5 / 46.9)	1732 (1277.5)	
NHM 8000				

Spindle Cooling System

The spindle temperature is kept uniform by the cooling system. The temperature sensor controls temperature of the jacket surrounding the spindle as well as the temperature of oil circulating about the spindle bearing, the gear and the motor flange for ensuring stable and precise machining.

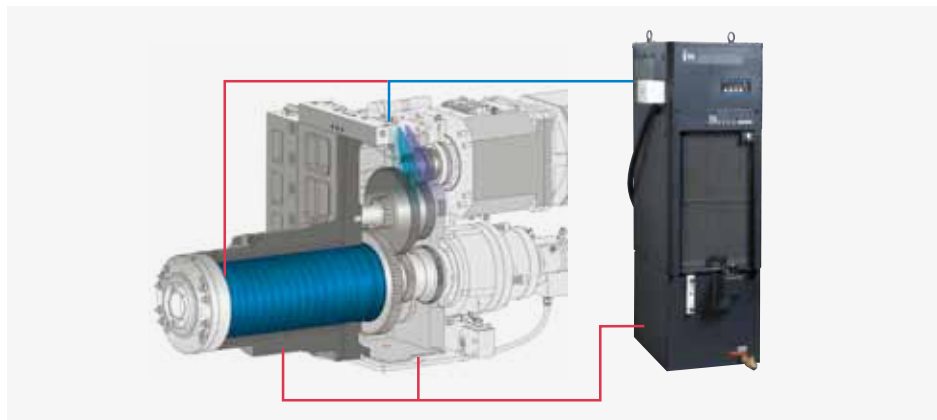

Dual Contact Tool System

Tool rigidity is enhanced by the firm clamping of the spindle. Tool lifecycle and cut-surface roughness have been improved as a result of the reduced vibration realized by the dual contact spindle.



Automatic Tool Changer

The servo-driven ATC provides high reliability and reduces tool change time.

Servo-driven ATC

The ATC is capable of handling weight from 25kg to 30kg at high speed using a servo motor, and fast tool indexing and spindle positioning.



Cutting Capacity

Model	Unit	Max. tool diameter x max. tool length	
		BT / CT / DIN	HSK
NHM 5000	mm (inch)	320 x 530 (12.6 x 20.8)	320 x 600 (12.6 x 23.6)
NHM 6300	mm (inch)	320 x 630 (12.6 x 24.8)	320 x 700 (12.6 x 27.6)
NHM 8000	mm (inch)	320 x 630 (12.6 x 24.8)	320 x 700 (12.6 x 27.6)

Tool change time (tool weight of less than 12 kg (26.5 lb))

Model	Unit	Tool to tool	Chip to chip
NHM 5000	s	2	7
NHM 6300	s		7.5
NHM 8000	s		8.5

Convenient Short Tool Cutting

The distance between the spindle and the center of the pallet has been reduced for heavier-duty cutting with shorter tools.

Features

- Increased tool rigidity with a larger diameter
- Innovative improvement of ATC repeatability
- Minimal Z axis displacement at high speed
- Increased tool service life

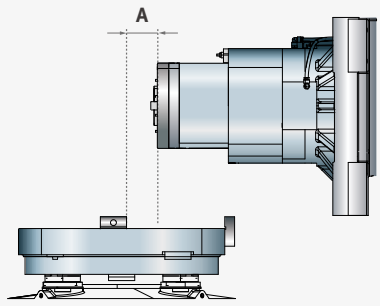

Tool Magazine

60 tools as a standard feature in addition to various options

Tool Magazine for Diverse Types of Tools, including Chain and Matrix Tool Types

The NHM Series provides 60 tools as a standard feature, and up to 376 tools as an option.

Chain type magazine

60ea standard

90ea

120ea

150ea option



Matrix type magazine option

196ea

256ea

316ea

376ea



Automatic Pallet Changer (APC)

The servo-driven APC boasts high reliability with its stable, accurate performance and reduced rejection ratio.

Improved Pallet and APC System

The servo-driven APC system realizes increased productivity with fast and accurate pallet change. In addition to its excellent reliability, the improved APC has more space for the operator's convenience.

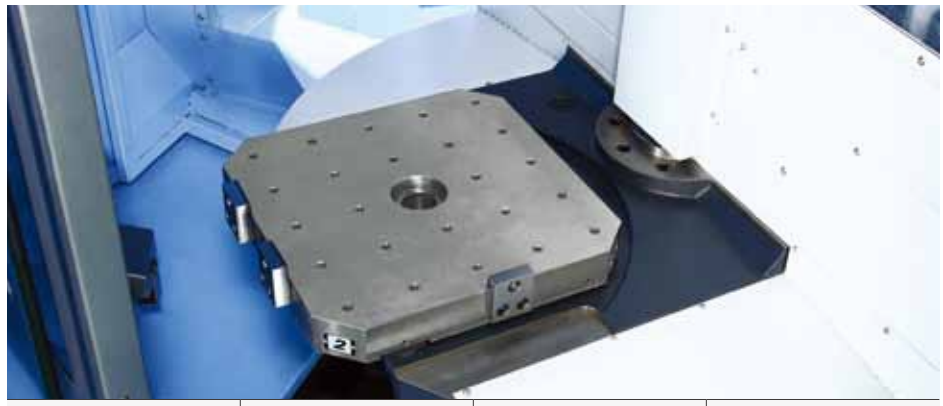

Classification	NHM 5000	NHM 6300	NHM 8000
Pallet change time	8.5 s	12 s	16 s

Cone Air Blower

As a mechanism designed for precise pallet position repeatability, the cone air blower injects high-pressure air into the table fixing pin connecting the table and the pallet in order to remove chips from the pin and guaranteeing them seating at the correct positioning of the workpiece.

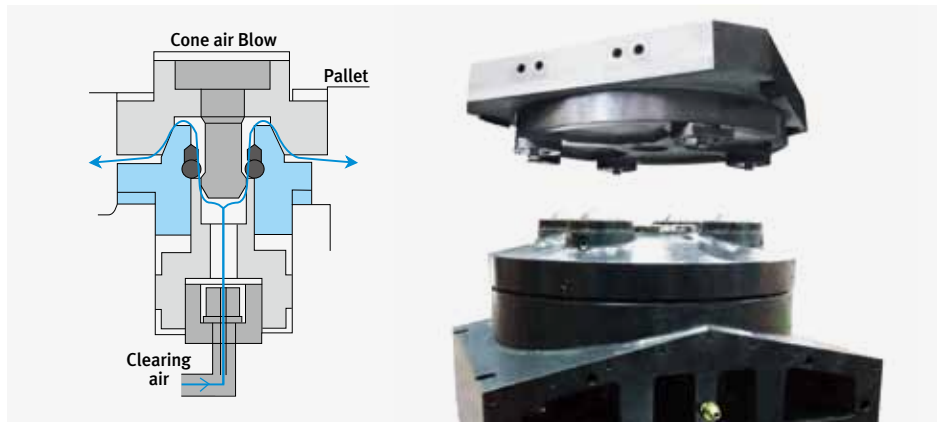

Max. Workpiece Size

The NHM Series provides more space for heavier and larger workpieces.

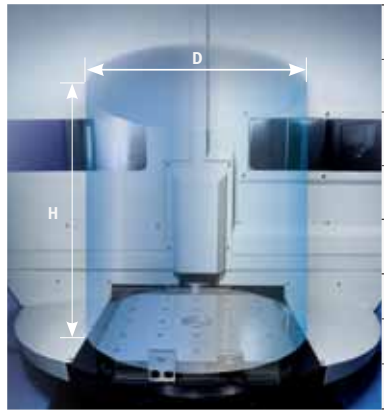

Max. workpiece size (D X H)		
NHM 5000	mm (inch)	Ø 850 x 1100 (33.5 / 43.3)
NHM 6300	mm (inch)	Ø 1050 x 1350 (41.3 / 53.1)
NHM 8000	mm (inch)	Ø 1450 x 1550 (57.1 / 61)
Max. workpiece weight (W)		
NHM 5000	kg (lb)	800 (1763.7)
NHM 6300	kg (lb)	1200 (2645.5)
NHM 8000	kg (lb)	2000 (4409.2)

Superior Machining Performance

The NHP Series realizes excellent machining performance thanks to its improved structure and comprehensive tooling system.

Higher Cutting Power

High-rigidity machining can be carried out with precision accuracy and diverse functions.

High Productivity

- Component of automobile : Carrier middle
- Material : Cast iron
- No. of tools : 21



Cycle time

Down

10%



Cutting Capacity

NHM 5000 — Motor power : 25 / 15 kW (33.5 / 20.1 Hp)

Face mill Carbon steel (SM45C)

ø125mm (3.94 inch) Face mill (8Z)

Machining rate cm³/min (in³/min)	Spindle speed r/min	Feedrate mm/min (ipm)
740 (452)	500	925 (36.4)

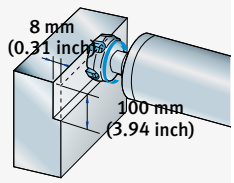

End mill Carbon steel (SM45C)

ø80mm (3.15 inch) U-Drill (2Z)

Machining rate cm³/min (in³/min)	Spindle speed r/min	Feedrate mm/min (ipm)
465 (28.4)	600	92.5 (3.6)

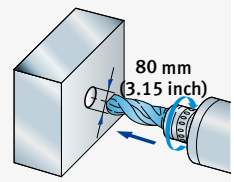

NHM 6300 / 8000 — Motor power : 35 / 22 kW (29.5 / 16.9 Hp)

Face mill Carbon steel (SM45C)

ø125mm (4.9 inch) (Face mill (8Z)

Machining rate cm³/min (in³/min)	Spindle speed r/min	Feedrate mm/min (ipm)
1045 (85.7)	564	1759 (69.3)

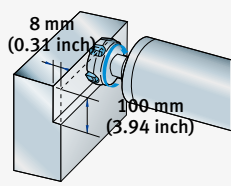

End mill Carbon steel (SM45C)

ø85mm (3.35 inch) U-Drill (2Z)

Machining rate cm³/min (in³/min)	Spindle speed r/min	Feedrate mm/min (ipm)
767 (46.8)	674	135 (5.3)

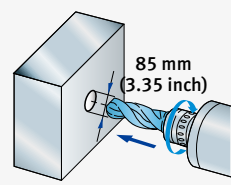

* The results, indicated in this catalogue are provides as example. They may not be obtained due to differences in cutting conditions and environmental conditions during measurement.

Optional Accessories

Diverse optional devices and features are available to meet specific customer requirements.

● Standard ○ Optional X N/A

NO.	Description	Features		NHM 5000	NHM 6300	NHM 8000
1	Tool magazine (No. of tool stations)	60 ea		●	●	●
2		90 ea		○	○	○
3		120 ea		○	○	○
4		150 ea		○	○	○
5	Type of tool shank	BT50		●	●	●
6		CAT50		○	○	○
7		DIN50		○	○	○
8		HSK A-100		○	○	○
9	Mist collector	Mist collector		○	○	○
10	Spindle	6000 r/min	15 / 25 kW (20.1 / 33.5 Hp)	●		
11			22 / 35 kW (29.5 / 46.9 Hp)		●	
12		8000 r/min	30 / 37 kW (40.2 / 49.6 Hp)	○		
13				○	○	○
14	Hydraulic fixtures	Hydraulic fixture line	2X2	○	○	○
15			4X4	○	○	○
16			6X6	○	○	○
17			8X8	○	○	○
18		Hydraulic fixture unit		○	○	○
19	Automatic workpiece measurement device	OMP60_RENISHAW		○	○	○
20		RMP60_RENISHAW		○	○	○
21	Auto tool measuring device	BK MIKRO		○	○	○
22		NEEDLE SWING TYPE		○	○	○
23		OMRON (Limit Switch Type)		○	○	○
24		TS27R		○	○	○
25		NC 4		○	○	○
26	Accuracy	Linear scale (X-axis)		○	○	○
27		Linear scale (Y-axis)		○	○	○
28		Linear scale (Z-axis)		○	○	○
29	Chip Handling System	Chip conveyor	HINGED Type	○	○	○
30			SCRAPER Type	○	○	○
31			DRUM Type	○	○	○
32		Chip bucket		○	○	○
33	Coolant	FLOOD		●	●	●
34		FLUSHING		●	●	●
35		SHOWER		○	○	○
37		TSC	1.5 kW 2.0 MPA (2 Hp 290 psi)	○	○	○
38			3.0 kW 3.0 MPA (4 Hp 435.1 psi)	○	○	○
39			7.5 kW 7.0 MPA (10 Hp 1015.3 psi)	○	○	○
40		Coolant gun		○	○	○
41		Oil skimmer		●	●	●
42		MQL System		○	○	○
43	Table	Index table (1° control)		●	●	●
44		Rotary table (0.001° control)		○	○	○
45	Pallet	Tap pallet		●	●	●
46		T-Slot pallet		○	○	○
47	AIR	Pallet air seat		○	○	○
48		AIR GUN		○	○	○
49	MPG	Portable MPG		●	●	●

Chip Conveyor option

Scraper type

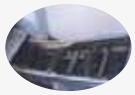

Hinge type

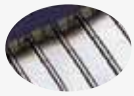

Drum filter type





Chip Conveyor

Measurement Systems



Auto tool damage detection device Ⅰ (BK 9) option

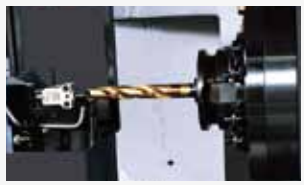

Auto tool damage detection device Ⅱ (OMRON) option



Automatic tool measuring device (TS 27R) option

Environment Friendly Devices



Oil skimmer



Mist collector option

Chip Disposal System



Flushing coolant



Flood coolant



Shower coolant option



Coolant gun option



Coolant spray gun on the spindle head



Screw conveyor



Spindle-through coolant spray device (TSC) option





MQL system (Misting device) option

Cutting Oil Cooling System option

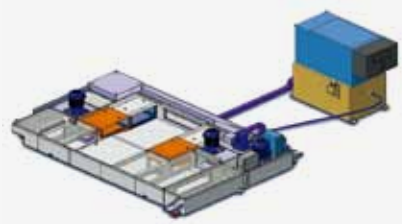

Linear Scale Feedback System option



Applications

We offer a wide range of solutions that can be optimized to suit each customer's needs.

Clamping Fixtures

The following hydraulic and pneumatic fixture options are available for setting up workpieces:

A variety of preparations for workpiece clamping fixtures (hydraulic / pneumatic) option

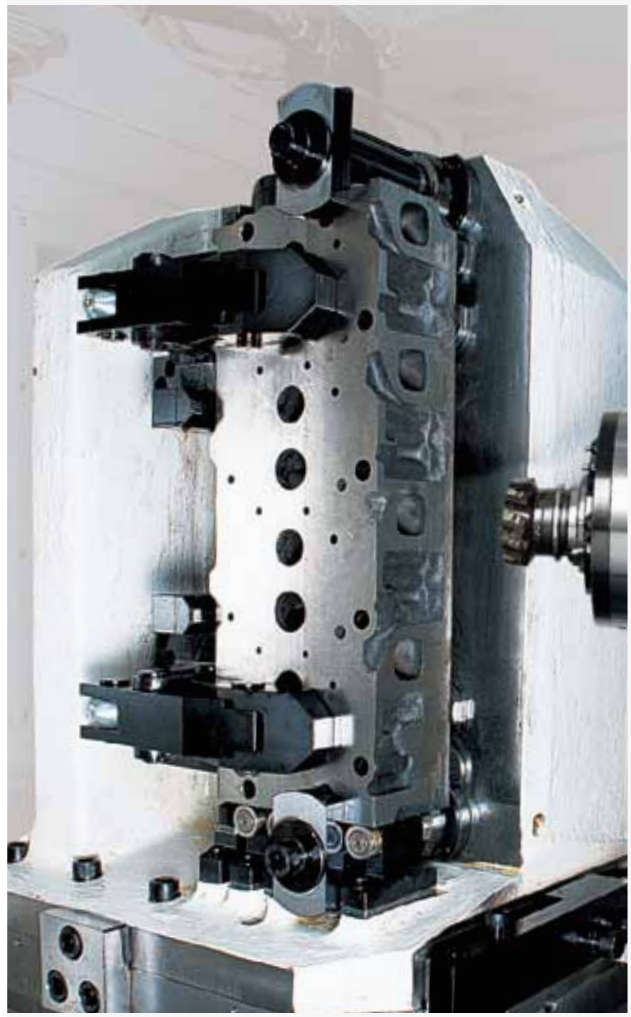

Hydraulic / pneumatic fixture pot

- A/B Line : 2, 4, 6, 8 Pairs (Including solenoid valve)
- P/T Line : 2, 4, 6, 8 Pairs (Excluding solenoid valve)

Clamping fixture hydraulic motor

- 2.2 kW (3.0 Hp) / 7MPa
- 3.7 kW (5.0 Hp) / 15MPa
- 5.5 kW (7.4 Hp) / 21MPa

※ Please provide us with detailed specifications on the order sheet.

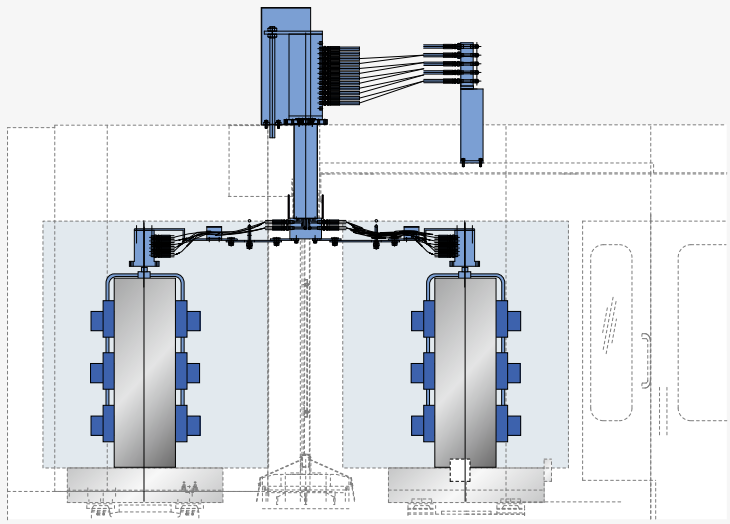

Pallet Extension System

Doosan's linear pallet system (LPS) and multipallet system (MPS) provides users with maximized productivity, rapid installation and commissioning, and easy maintainability.

Doosan Linear Pallet System [LPS Ⅱ] option

Designed to provide users with an optimised system, the LPSII linear pallet systems designed and constructed by Doosan, offering outstanding flexibility, including system extension and layout change.

LPS Ⅱ (Linear Pallet System)

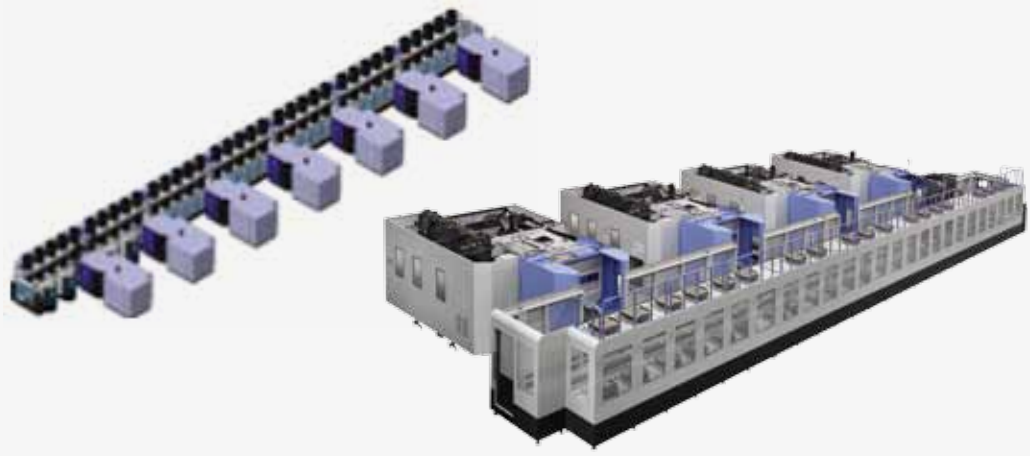

LPS II Model	LPS 500 II	LPS 630 II	LPS 800 II
Available Model	NHM 5000	NHM 6300	NHM 8000
Forking type	Twin Fork type		
No. of machines	1 – 7		
No. of setup stations	1 – 4		
No. of pallets	12 ~ 70	10 ~ 70	8 ~ 70
Dimensions (L x W)	7824 x 2400 mm (308.0 X 94.5 inch)	7904 x 785 mm (311.2 X 30.9 inch)	8952 x 3500 mm (352.4 X 137.8 inch)

Features

- Easy for system extension
- Sufficient workpiece space for high level of work efficiency
- Stable and efficient system operation
- Faster installation and commissioning
- Applicable to all HMC Series machines
- Excellent maintainability

LPS Standard Control Software

- Easily-storable basic information for flexible production.
- Platform management software for rapid production and changes in quantity.
- LPS management solution for fast and flexible production and sudden changes in quantity.

Doosan Production Management System [DPMS]



The DPMS is an operating system designed to ensure effective control and management of the LPS. The main window provides a solution that enables a flexible and rapid response to changes in output.

System Outline

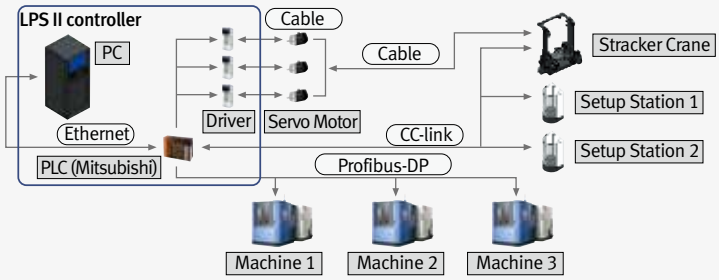

Doosan Multi-pallet Station [MPS] option

Compared with standard machines that use 2-pallet type APCs, the MPS can automatically handle 7 to 9 pallets for an extended period. This function enables small quantity batch production using machining scheduling.

Doosan Multi-pallet Station [DMPS]

The DPMS is an operating system for effective control and management of the MPS. The functions of the DMPS include scheduled operation, data input, and setting change.





7 MPS

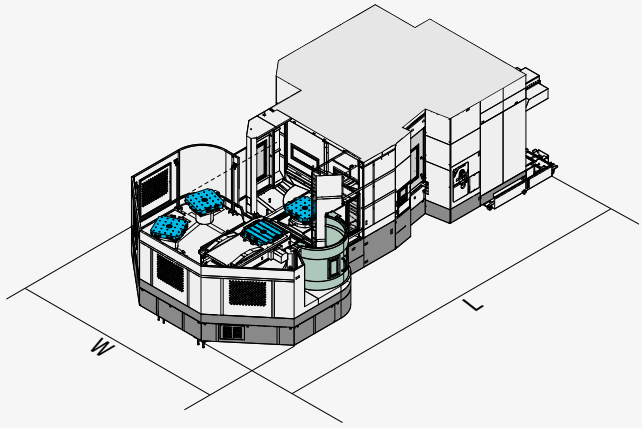

9 MPS

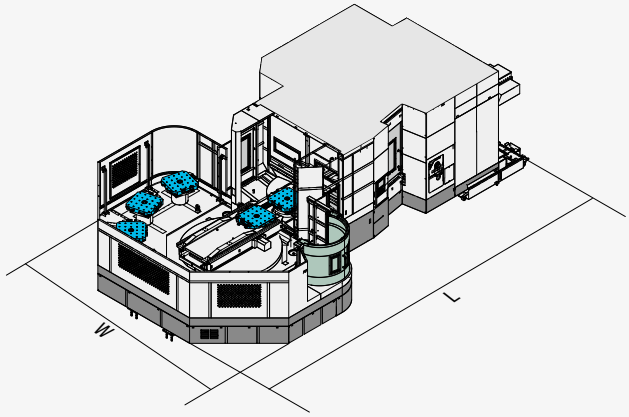

System Options

	Unit	NHM 5000		NHM 6300		NHM 8000	
		7- MPS	9 - MPS	7- MPS	9 - MPS	7- MPS	9 - MPS
No. of pallets	pcs.	7	9	7	9	7	9
Foot print (Length)	mm (inch)	9490 (373.6)	10140 (399.2)	10560 (415.7)	11000 (433.1)	16010 (630.3)	17150 (675.2)
Foot print (Width)	mm (inch)	4220 (166.1)	4430 (174.4)	4780(188.2)	5770 (227.2)	5920 (233.1)	6600 (259.8)

* Chip conveyor and MPS foot board are excluded.

User Friendly

Ergonomic design guarantees users' convenience and safety.

User-oriented Design

Internal footings and an anti-door-lock function are provided to prevent the operator from being locked in the machine and to guarantee the operator's safety. The centralized service unit and screen panel enhance the operator's convenience.

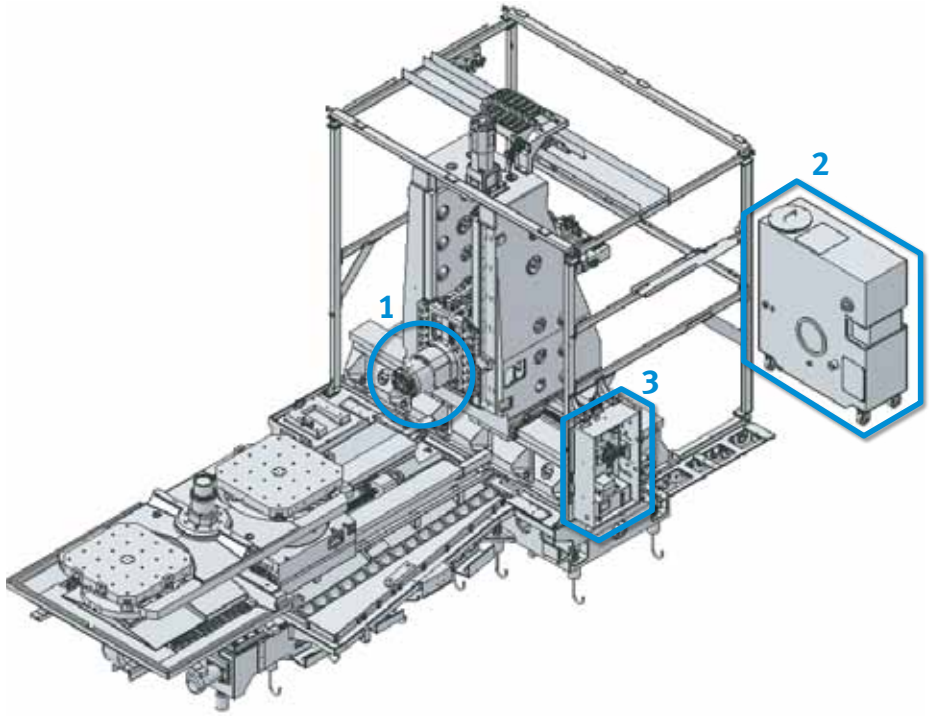

1.
Flushing system to remove chips from the spindle top and slide cover.



2.
Coolant through spindle function for enhanced productivity option



3.
Centralized utility service unit
The utilities service unit is centralized for convenient maintainability.



ATC screen panel provides easy tool data entry at the tool magazine area



Safety has been improved with machine internal footings



Anti-door lock device



User Convenience

User convenience has been significantly enhanced with a new operation panel.

Simple and Convenient Operation Panel

The operator's panel has been redesigned and integrated for better usability. Additional, customized function switches (option) can be provided to maximize the operator's convenience.



Clamping fixture lock/unlock button, counter, timer and other special optional buttons can be provided.

The buttons are separated by partitions in order to prevent erroneous operation of the buttons.

Swiveling Operating Panel



The operating panel can swivel by 90°, and displays various alarm messages concerning machine and controller error, enhancing the operator's convenience.

PCMCIA Card

The PCMCIA card enables uploading and downloading of the NC program, NC parameters, tool information, and ladder programs, and also supports DNC operation.

Portable MPG

The portable MPG allows the user to set up workpieces more easily.



USB Port

Upload/download of NC software programs, NC parameters, tool information and ladder program using a USB drive is allowed, but DNC operation is not supported.



EOP Function

Doosan's Easy Operation Package (EOP) supports the user with tool, help desk, operation, and pallet magazine functions among others.

Easy Operation Package

Doosan's EOP supports the user with tool, help desk, operation, and pallet magazine functions among others to maximize operational efficiency and user convenience.

Tool Support Functions



Tool management I

- Tool magazine control
- Tool state display
- Fastems Tool Add/Remove Function option



Tool management II option

- Tool magazine control
- Tool life management
- Tool life prediction
- Tool state control
- Balluff Tool ID function



Tool load monitor option

- Detection of tool damage
- Detection of abnormalities during operation
- Detection of no-load air cutting



ATC / APC panel

- ATC manual
- APC manual

Operation Support Functions



Operation rate

- Measure various machine operating rate
- Support 3 shift operation
- calculate and save 30 days operating rate
- Show data for a specific period



PMC switch

- Operation panel function (option)
- Substitutes toggle switches
- NC option software

Help Desk Functions

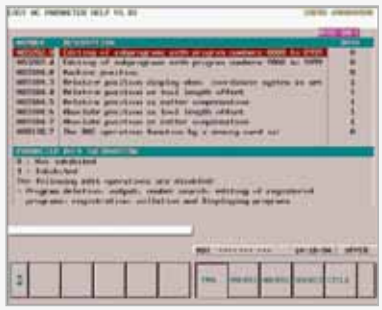

Easy NC parameter

- Help for major parameters
- Show parameter settings

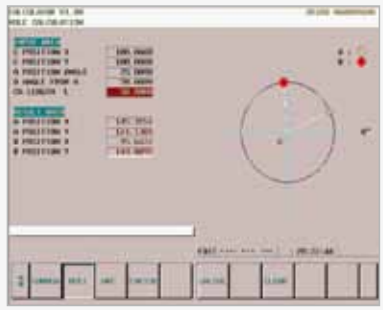

Calculator

- Calculator function
- 4 arithmetical operations
- Supports mathematical functions



M CODE List

- List of major M codes



G CODE List

- List of major G codes

Pallet Magazine Support Functions



Multi-pallet station option

- Control MPS operation
- Display information on MPS PMG
- Set-up of machining schedule
- Auto Call function
- Manual operation and coordinate setting function



APC setting

- 2-pallet APC operation screen

Spindle Power – Torque Curve

NHM series

NHM 5000

Spindle Speed : 6000 r/min
Spindle Motor : 25 / 15 kW (33.5 / 20.1 Hp)

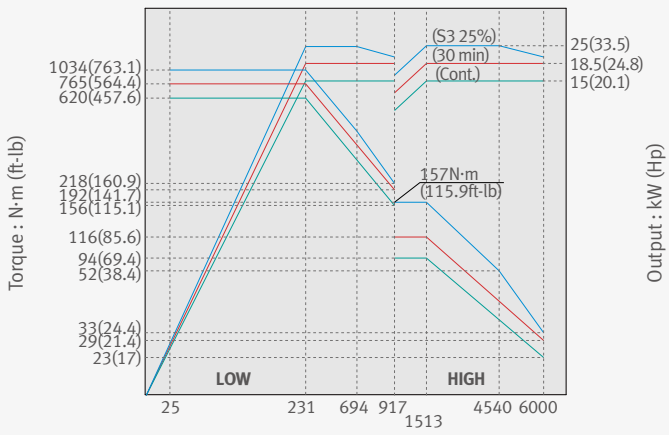

NHM 5000 option, NHM 6300 / 8000

Spindle Speed : 6000 r/min
Spindle Motor : 35 / 22 kW (46.9 / 29.5 Hp)

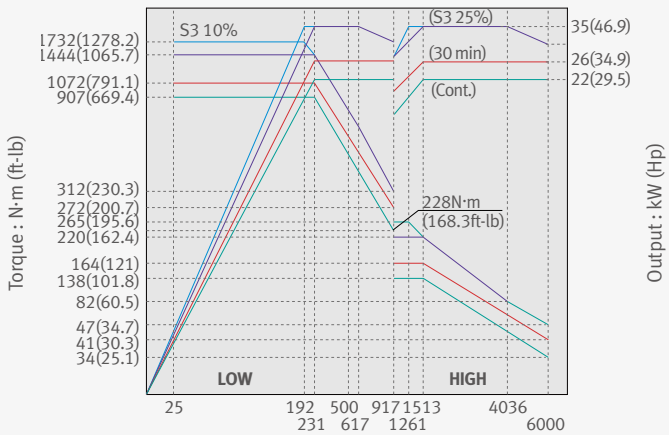

NHM 5000 / 6300 / 8000 option

Spindle Speed : 6000 r/min
Spindle Motor : 37 / 30 kW (49.6 / 40.2 Hp)

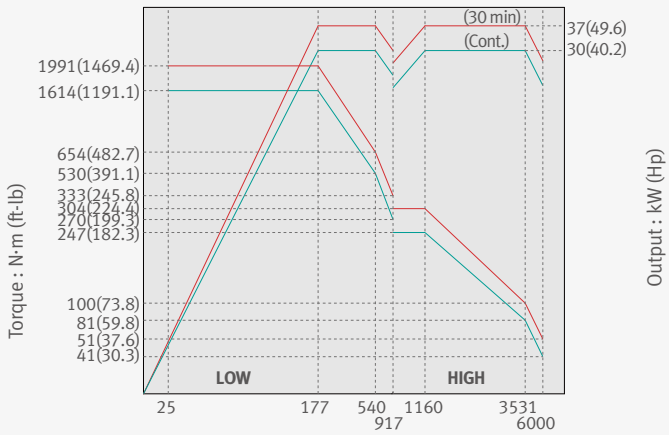

NHM 5000 / 6300 / 8000 option

Spindle Speed : 8000 r/min
Spindle Motor : 35 / 22 kW (46.9 / 29.5)

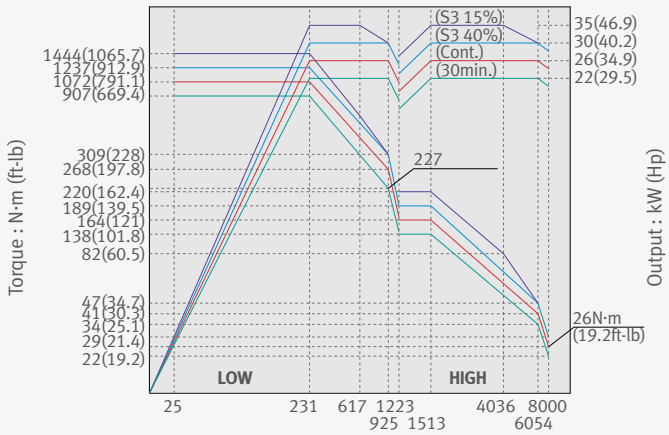

External Dimensions

NHM series

Unit : mm (inch)

Top View

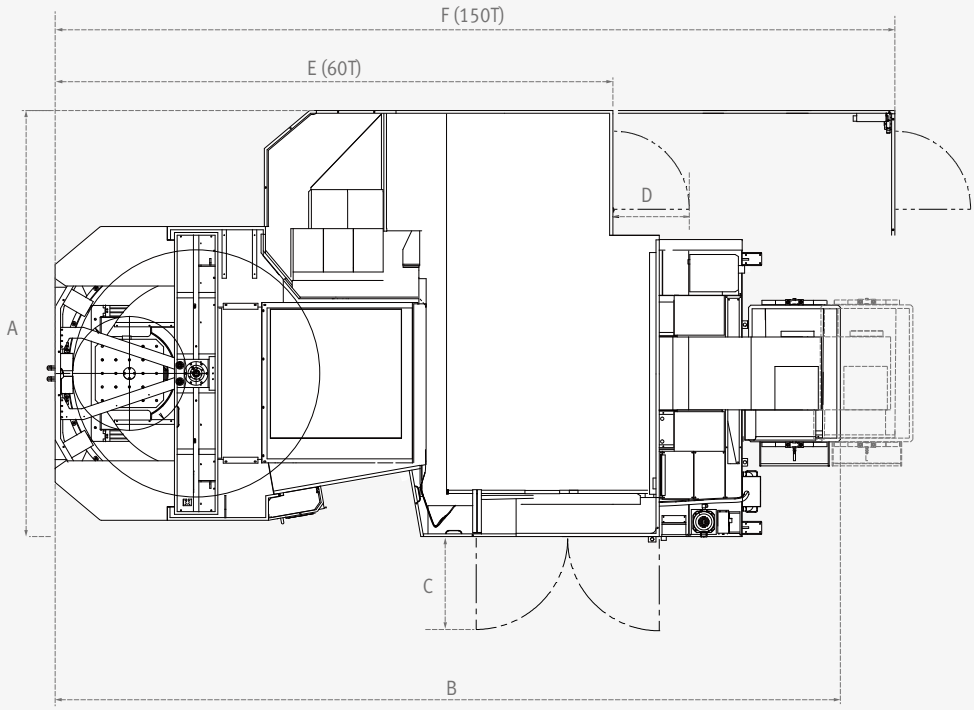

Side View

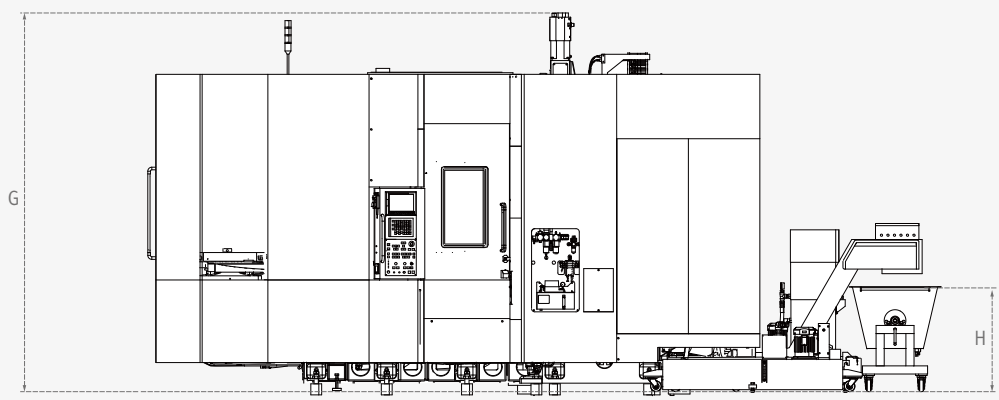

Model	A	B	C	D	E	F	G	H
NHM5000	3670 (144.5)	6830 (268.9)	660 (25.9)	745 (29.3)	4675 (184.1)	7305 (287.6)	3330 (131.1)	1085 (42.7)
NHM6300	3930 (154.7)	7300 (287.4)	660 (25.9)	745 (29.3)	5145 (202.6)	7745 (304.9)	3495 (137.6)	1085 (42.7)
NHM8000	4325 (170.3)	8265 (325.4)	660 (25.9)	745 (29.3)	6000 (236.2)	8630 (39.8)	3760 (148)	1085 (42.7)

Table External Dimensions

NHM series

NHM 5000

Unit : mm (inch)

Standard Specifications (500×500(19.7x19.7))

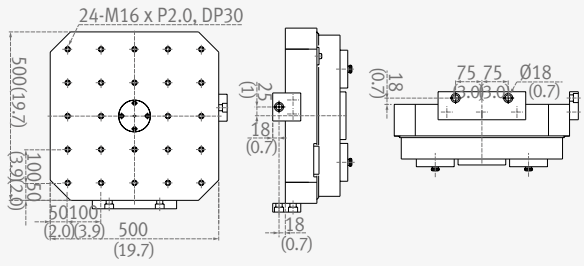

Optional Specifications (630×630(24.8x24.8))

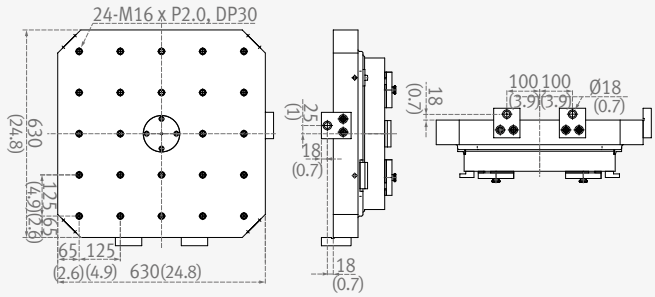

NHM 6300

Unit : mm (inch)

Standard Specifications (630×630(24.8x24.8))

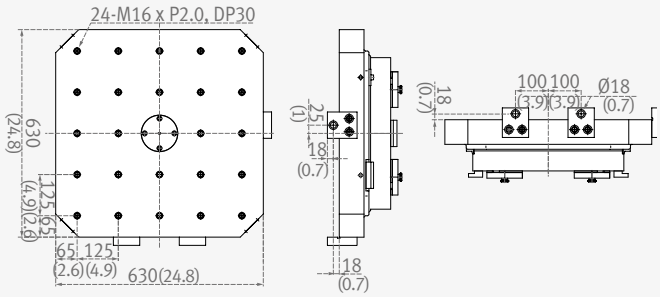

Optional Specifications (800×800(31.5x31.5))

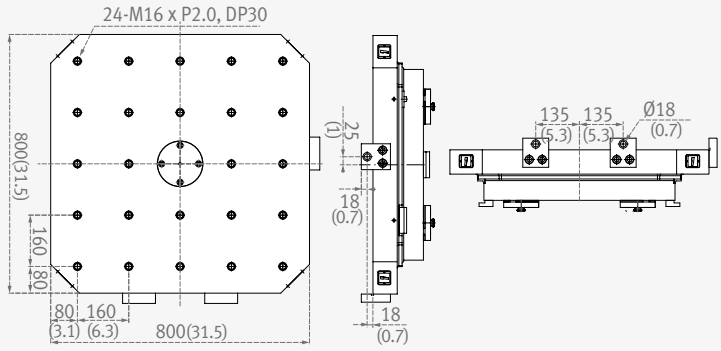

NHM 8000

Unit : mm (inch)

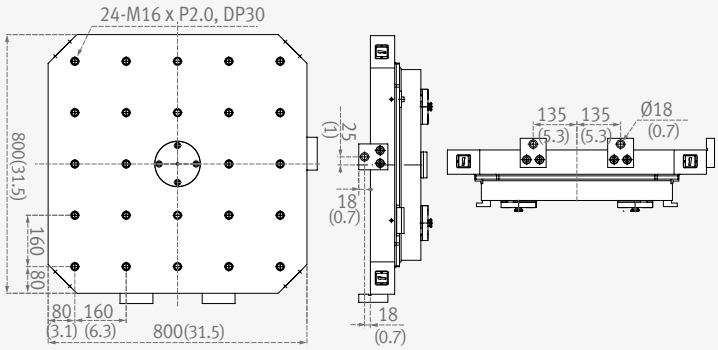

Tool Shank

NHM series

BT50

Unit : mm (inch)

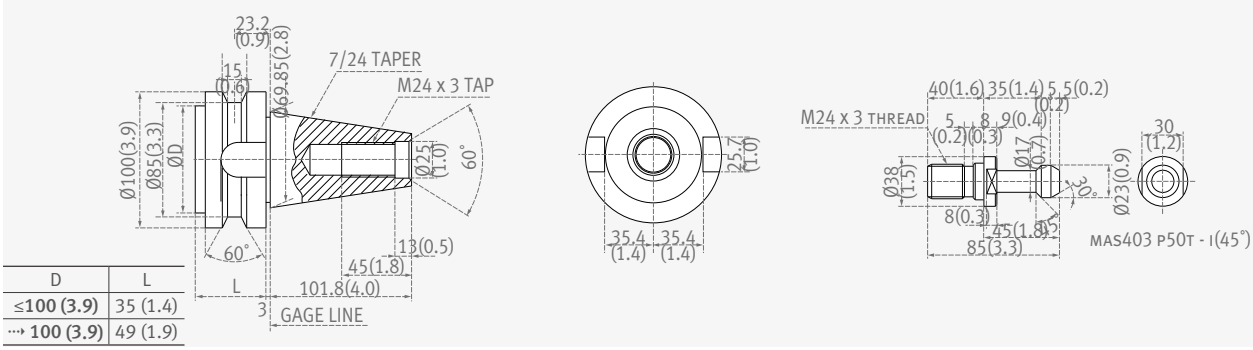

D	L
≤100 (3.9)	35 (1.4)
···› 100 (3.9)	49 (1.9)

DIN50

Unit : mm (inch)

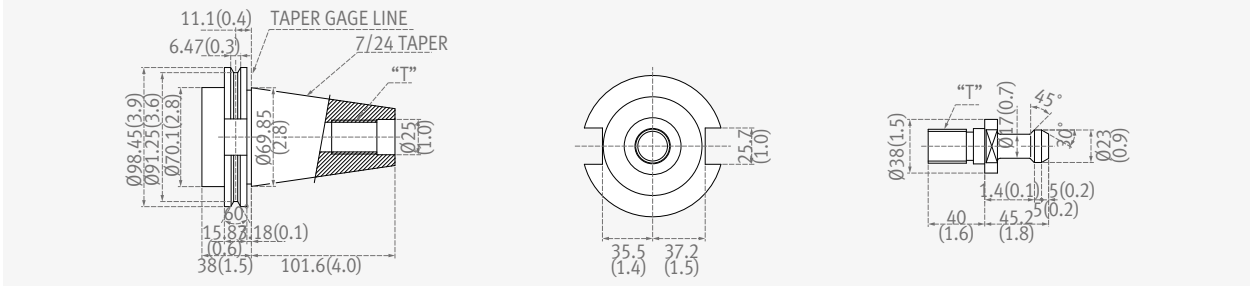

CAT50

Unit : mm (inch)

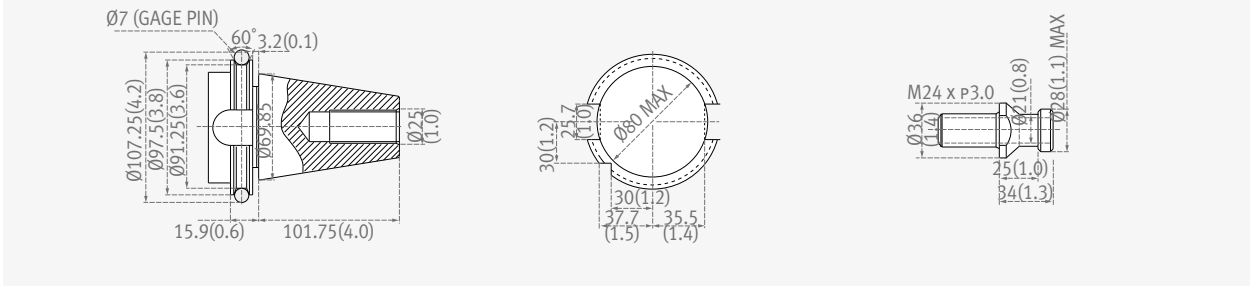

Boring bar Size

Unit : mm (inch)

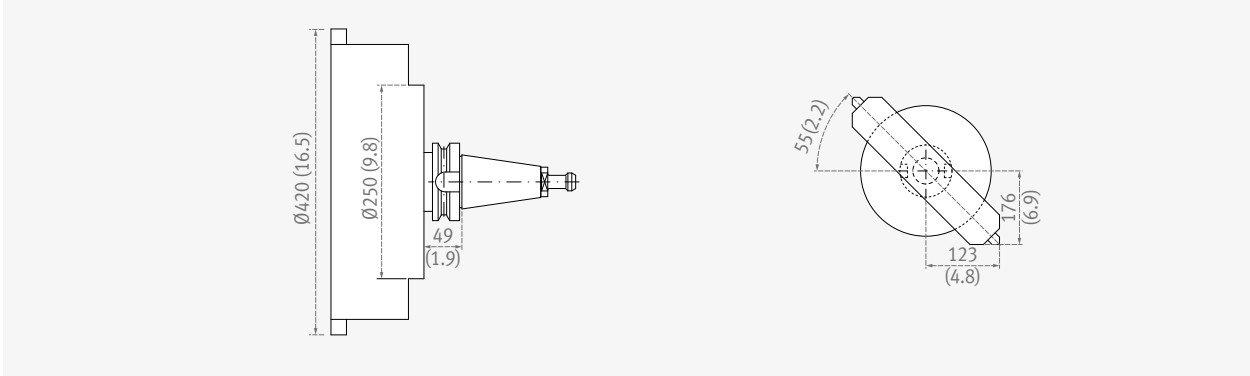

Workpiece working area

NHM series

Workpiece working area

Unit : mm (inch)

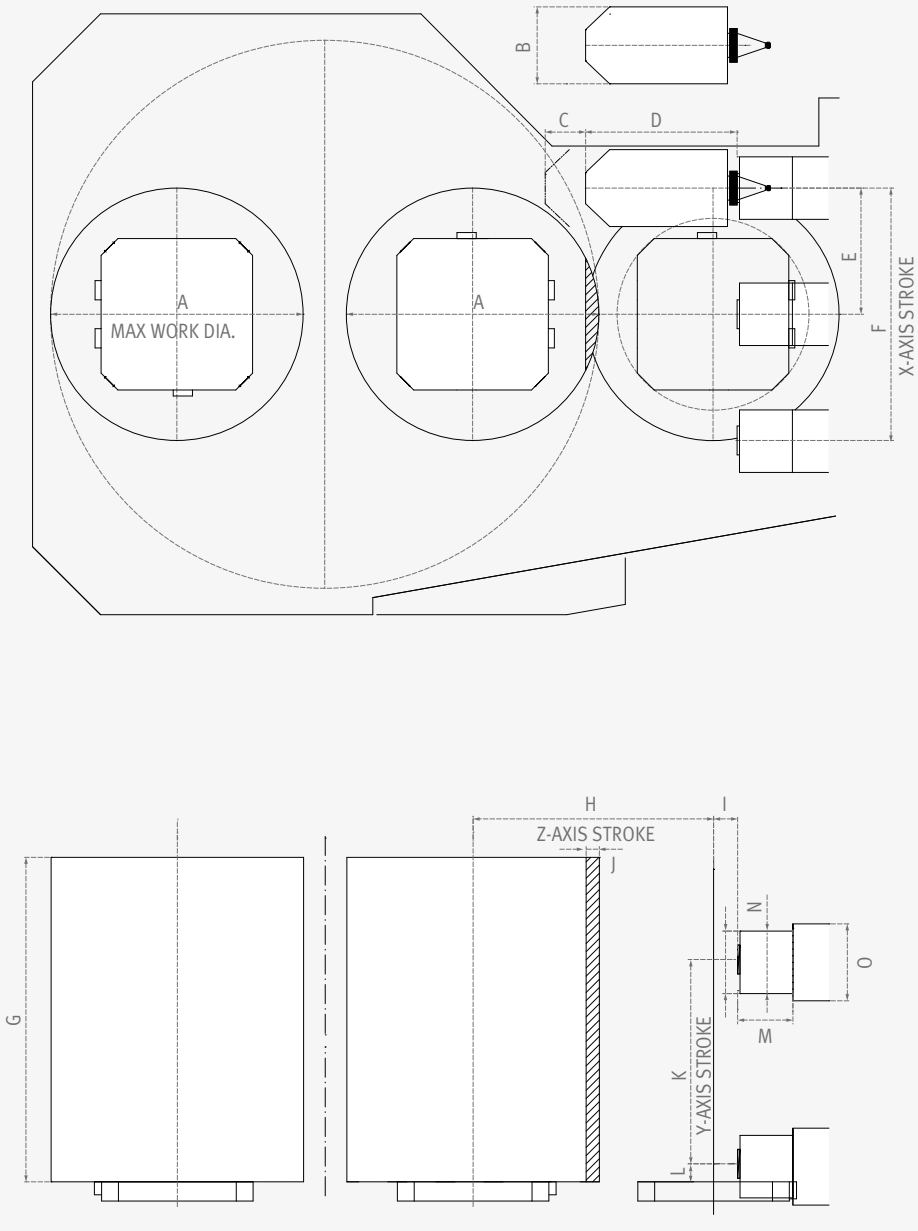

Model	A	B	C	D	E	F	G	H	I	J	K	L	M	N	O
NHM 5000	Ø850 (33.5)	Ø320 (12.6)	168 (6.6)	530 (20.9)	400 (15.7)	800 (31.5)	1100 (43.3)	850 (33.5)	100 (3.9)	5 (0.2)	750 (29.5)	75 (3.0)	230 (9.1)	Ø260 (10.2)	Ø320 (12.6)
NHM 6300	Ø1050 (41.3)	Ø320 (12.6)	168 (6.6)	630 (24.8)	525 (20.7)	1050 (41.3)	1350 (53.1)	1000 (39.4)	100 (3.9)	55 (2.2)	900 (35.4)	75 (3.0)	230 (9.1)	Ø260 (10.2)	Ø320 (12.6)
NHM 8000	Ø1450 (57.1)	Ø320 (12.6)	168 (6.6)	630 (24.8)	700 (27.6)	1400 (55.1)	1550 (61.0)	1370 (53.9)	150 (5.9)	5 (0.2)	1200 (47.2)	75 (3.0)	230 (9.1)	Ø260 (10.2)	Ø320 (12.6)

Machine Specifications



Description			Unit	NHM 5000	NHM 6300	NHM 8000
Cutting Capacity	Travel distance	X-axis	mm (inch)	800 (31.5)	1050 (41.3)	1400 (55.1)
		Y-axis	mm (inch)	700 (27.6)	850 (33.5)	1050 (41.3)
		Z-axis	mm (inch)	850 (33.5)	1000 (39.4)	1200 (47.2)
	Distance from spindle nose to table center		mm (inch)	100 ~ 950 (3.9 ~ 37.4)	100 ~ 1100 (3.9 ~ 43.3)	150 ~ 1350 (5.9 ~ 53.1)
	Distance from spindle center to table top		mm (inch)	75 ~ 775 (2.9 ~ 30.5)	75 ~ 925 (2.9 ~ 36.4)	75 ~ 1125 (2.9 ~ 44.3)
Feed Rate	Rapid feed rate	X-axis	m/min	30 (1181.1)		24 (944.9)
		Y-axis	m/min	30 (1181.1)		24 (944.9)
		Z-axis	m/min	30 (1181.1)		24 (944.9)
	Cutting feed rate		mm/min	15000 (590.5)		12000 (472.4)
Pallet	Pallet type			24-M16 × P2.0		
	Pallet indexing angle		deg	1 {0.001}*		
	Max. loading capacity		kg (lb)	800 (1763.7)	1200 (2645.5)	2000 (4409.2)
	Max. workpiece size		mm (inch)	Ø 850 x 1100 (Ø 33.5 / 43.3)	Ø 1050 x 1350 (Ø 41.3 / 53.1)	Ø 1450 x 1550 (Ø 57.1 / 61)
	Pallet size		mm (inch)	500 x 500 (19.7 x 19.7)	630 x 630 (24.8 x 24.8)	800 x 800 (31.5 x 31.5)
Spindle	Max spindle speed		r/min	6000 {8000}*		
	Taper specifications			ISO #50, 7/24 TAPER		
	Max. torque		N·m (ft-lb)	1034 {1444}* (368.8 {1065}*)	1732 {1444}* (1277.5 {1065}*)	
Auto Pallet Changer (APC)	No. of pallets		ea	2		
	Pallet change time		s	8.5	12	16
	APC indexing angle (rotation)		deg	90		
Automatic Tool Changer (ATC)	Tool shank type			BT50 {CAT50 / DIN50 / HSK-A100}*		
	Tool storage capacity	Chain type	ea	60 {90 / 120 / 150}		
		Matrix type	ea	{196 / 256 / 316 / 376}*		
	Max. tool diameter	W/O adjacent tool	mm (inch)	320 (12.6)		
		With adjacent tool	mm (inch)	130 (5.1)		
	Max. tool length		mm (inch)	530 (20.8) (BT / CAT / DIN), 600 (HSK)	630 (24.8) (BT / CAT / DIN), 700 (HSK)	630 (24.8) (BT / CAT / DIN), 700 (HSK)
	Max. tool weight		kg (lb)	30 (66)		
	Tool change time (tool to tool, tools weighing less than 12kg(26.5lb))		s	2		
	Tool change time (chip-to-chip, tools weighing less than 12kg(26.5lb))		s	7	7.5	8.5
Motor	Spindle motor power		kW (Hp)	25 / 15 {35 / 22} (33.5 / 20.1 {46.9 / 29.5}*)	35 / 22 (46.9 / 29.5)	
Power Source	Power consumption		kVA	60	70	
	Compressed air pressure		Mpa (psi)	0.54 (78.3)		
Tank Capacity	Coolant tank capacity		L (g)	825 (217.9)	925 (244.4)	
	Lubricant tank capacity		L (g)	7.2 (1.9)		
Machine Dimensions	Height		mm (inch)	3330 (131.1)	3495 (137.6)	3760 (148)
	Length		mm (inch)	6075 (239.2)	6522 (256.8)	7380 (290.6)
	Width		mm (inch)	3670 (144.5)	3930 (154.7)	4325 (170.3)
	Weight		kg (lb)	18500 (40785.5)	20500 (45194.8)	25500 (56217.9)

* { } : Option

NC Unit Specifications

FANUC 31i

● Standard ○ Optional X N/A

Item	Spec.	FANUC 31i
AXES CONTROL		
Controlled axes	4 (X,Y,Z,B)	X, Y, Z, B
Additional controlled axes	ADD 1 AXIS (5TH AXIS)	○
Simultaneously controlled axes	Positioning(G00)/Linear interpolation(G01) : 3 axes Circular interpolation(G02, G03) : 2 axes	●
Least command increment	0.001 mm / 0.0001"	●
Least input increment	0.001 mm / 0.0001"	●
Increment system C	IS-C	○
Interpolation type pitch error compensation		○
Position switch		○
Inverse time feed		○
Cylindrical interpolation	G07.1	○
NURBS interpolation		○
Bell-type acceleration/deceleration before look ahead interpolation	Included in AI contour control I or II (0i-MF, 31/32i)	●
Rigid tapping bell-shaped acceleration/ deceleration	Rigid tapping is required.	○
Exponential interpolation		○
Involute interpolation		○
Smooth backlash compensation		●
Automatic corner override	G62	○
Automatic corner deceleration	Included in AI contour control I or II (0i-MF, 31/32i)	●
Cutting feedrate clamp		●
Rapid traverse bell-shaped acceleration/ deceleration		●
Handle interruption		○
Manual handle retrace		○
Manual handle feed 2/3 unit		○
Nano smoothing		○
AICC II	200BLOCK	●
AICC II	400 BLOCK	○
High-speed processing	600 BLOCK	○
Look-ahead blocks expansion	1000 BLOCK	○
Linear ACC/DEC before cutting feed interpolation		●
SPINDLE & M-CODE FUNCTION		
M-code function	M 3 digits	●
Spindle orientation		●
Retraction for rigid tapping		●
Rigid tapping	G84, G74	●
TOOL FUNCTION		
Number of tool offsets	200-pairs	●
Number of tool offsets	400-pairs	○
Number of tool offsets	499 / 999 / 2000 -pairs	○
Tool nose radius compensation	G40, G41, G42	●
Tool length compensation	G43, G44, G49	●
Tool life management		●
Addition of tool pairs for tool life management		○
Tool number command	T3 digits	●
Tool offset memory C	Geometry / Wear and Length / Radius offset memory	●
Tool length measurement		●
Tool length offset		●
Tool offset	G45 - G48	○
Rotary table dynamic fixture offset		○
Work setting error compensation		○
PROGRAMMING & EDITING FUNCTION		
Absolute / Incremental programming	G90 / G91	●
Automatic Coordinate system setting		●
Background editing		●
Canned cycle	G73, G74, G76, G80 - G89, G99	●
Circular interpolation by radius programming		●
Custom macro		●
Addition of custom macro common variables	#100 - #199, #500 - #999	●
Macro executor		●
Custom software	2MB	-
Custom software	4MB, 6MB	-
Custom software	8MB	●
Custom software	12MB, 16MB	○

Item	Spec.	FANUC 31i
Decimal point input		●
Extended P-code variables 256Kbyte		-
Extended P-code variables 512Kbyte		●
Extended P-code variables 1Mbyte		-
Extended part program editing		●
Part program storage	256KB(640m)	●
Part program storage	512KB(1,280m)	○
Part program storage	1MB(2,560m)	○
Part program storage	2MB(5,120m)	○
Part program storage	4MB(1,0240m)	○
Part program storage	8MB(2,0480m)	○
Inch/metric conversion	G20 / G21	●
Label skip		●
Maximum commandable value	±99999.999mm (±9999.9999 inch)	●
Number of Registered programs	400 ea	-
Number of Registered programs	500 ea	●
Optional block skip	1 BLOCK	●
Optional block skip	9 BLOCK	○
Optional stop	M01	●
Program file name	32 characters	●
Program number	O4-digits	-
Sequence number	N 8-digit	N8 digit
Playback function		○
Workpiece coordinate system	G52 - G59	●
Addition of workpiece coordinate system	G54.1 P1 - 48 (48 pairs)	●
Addition of workpiece coordinate system	G54.1 P1 - 300 (300 pairs)	○
Tilted working plane indexing command	G68.2	○
OTHERS FUNCTIONS (Operation, setting & Display, etc)		
Embeded Ethernet		●
MDI / DISPLAY unit	8.4" Color LCD, keyboard for data input(small), soft-keys	-
MDI / DISPLAY unit	10.4" Color LCD, Keyboard for data input, soft-keys	●
MDI / DISPLAY unit	15" Color LCD, Keyboard for data input, soft-keys	○
I/O interface	RS - 232C	●
USB memory interface	Only Data Read & Write	●
Stored stroke check 2		○
Multi language display		●
3rd / 4th reference return		○
Cs contouring control		○
Reader/Puncher interface (for 2ch)		●
Multi spindle control		-
Retraction for 3-dimensional rigid tapping		○
Extended Spindle orientation (Spindle Multi Orientation)		●
Chopping function	G81.1	○
High speed skip function		○
Polar coordinate command	G15 / G16	○
Polar coordinate interpolation	G12.1 / G13.1	○
Programmable mirror image	G50.1 / G51.1	○
Scaling	G50, G51	○
Single direction positioning	G60	○
Pattern data input		○
Jerk control	AI contour control II is required.	○
Fast Data server with1GB PCMCIA card		○
Fast Ethernet		○
3-dimensional coordinate conversion		○
3-dimensional tool compensation		○
3-dimensional manual feed		○
Tape format for FS15		○
Tape format for FS10/11		-
Figure copying	G72.1, G72.2	○
Machining time stamp function		○
Machining quality level adjustment		○
EZ Guide I with 10.4" Color TFT	-.Doosan infracore Conversational Programming Solution -.When the EZ Guide i is used, the Dynamic graphic display cannot application	○
Dynamic graphic display (with 10.4" Color TFT LCD)	-.Machining profile drawing. -.When the EZ Guide i is used, the Dynamic graphic display cannot application	○

Responding to Customers Anytime, Anywhere

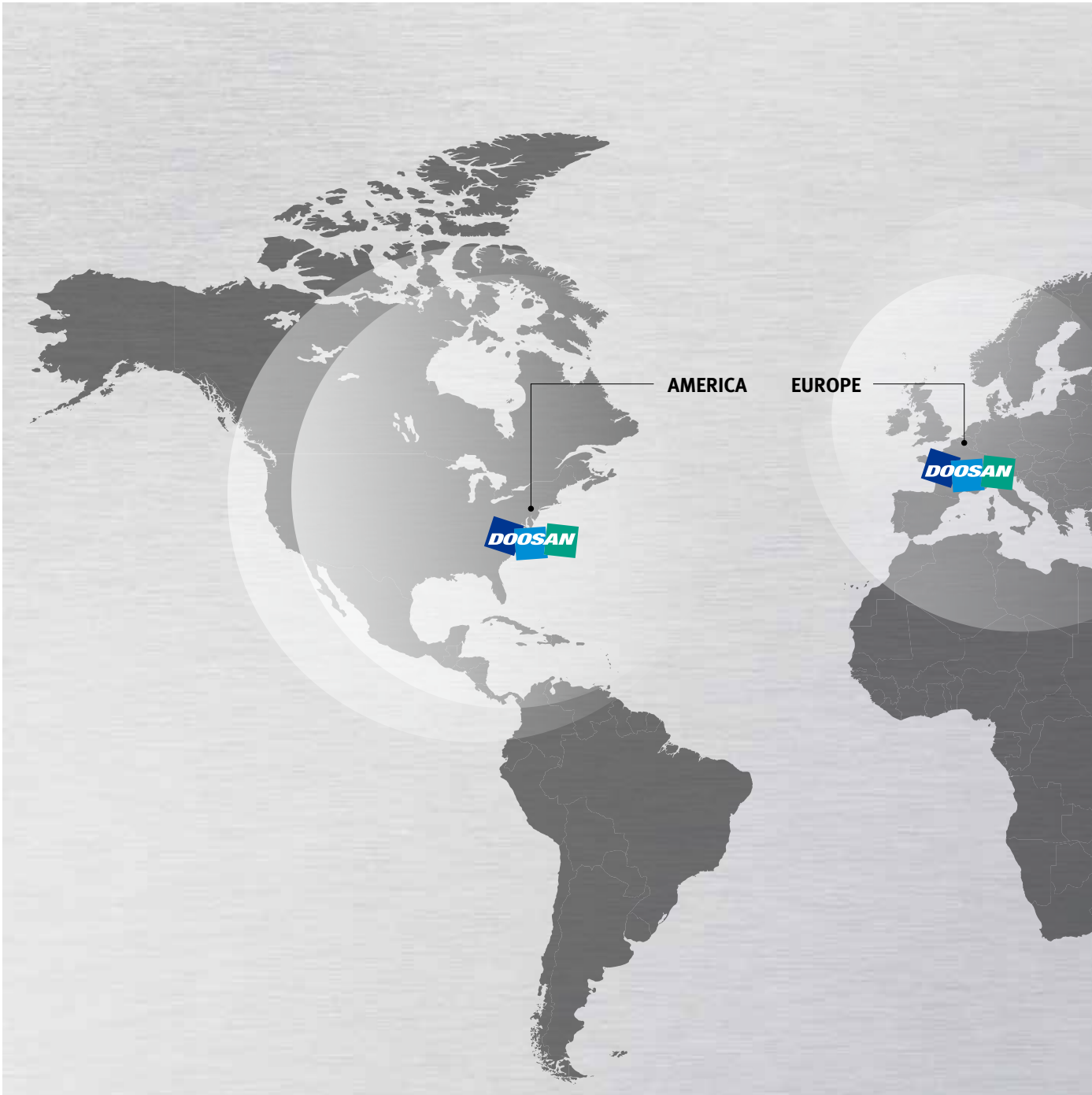

Global Service Support Network

Corporations	Dealer Networks	Technical Centers	Factories
5	122	18	3

Technical Center: Sales Support, Service Support, Parts Support

Doosan Machine Tools' Global Network, Responding to Customer's Needs nearby, Anytime, Anywhere

Doosan machine tools provides a system-based professional support service before and after the machine tool sale by responding quickly and efficiently to customers' demands. By supplying spare parts, product training, field service and technical support, we can provide top class support to our customers around the world.



Domestic Service Support Network

Integrated Support Centers	Sales Branch Offices	Post-Sales Service Centers	Designated Repair Service Centers
2	7	6	31

Customer Support Service

We help customers to achieve success by providing a variety of professional services from pre-sales consultancy to post-sales support.

Supplying Parts

- Supplying a wide range of original Doosan spare parts
- Parts repair service

Field Services

- On site service
- Machine installation and testing
- Scheduled preventive maintenance
- Machine repair

Technical Support

- Supports machining methods and technology
- Responds to technical queries
- Provides technical consultancy

Training

- Programming / machine setup and operation
- Electrical and mechanical maintenance
- Applications engineering

Main Specifications

NHM series

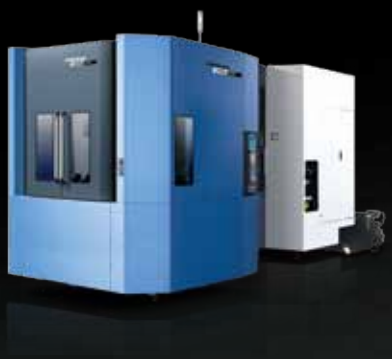

Description	Unit	NHM 5000	NHM 6300	NHM 8000
Pallet size	mm (inch)	500 x 500 (19.7 x 19.7)	630 x 630 (24.8 x 24.8)	800 x 800 (31.5 x 31.5)
Tool taper	taper	50	50	50
Max. spindle speed	r/min	6000	6000	6000
Max. spindle motor power	kW (Hp)	25 (33.5)	35 (46.9)	35 (46.9)
Travel distance (X / Y / Z)	mm (inch)	800 / 700 / 850 (31.5 / 27.6 / 33.5)	1050 / 850 / 1000 (41.3 / 33.5 / 33.4)	1400 / 1050 / 1200 (55.1 / 41.3 / 47.2)
Tool storage capacity	ea	60	60	60
NC system	-	FANUC / SIEMENS	FANUC / SIEMENS	FANUC / SIEMENS

Doosan Machine Tools

http://www.doosanmachinetools.com
www.facebook.com/doosanmachinetools

Optimal Solutions for the Future

Head Office
Yeonkang Bldg., 6th FL., 270, Yeonji-dong, Jongno-gu, Seoul, Korea
Tel +82-2-3670-5345 / 5362
Fax +82-2-3670-5382

Doosan Machine Tools China
Room 101,201,301, Building 39 Xinzhuan Highway No.258 Songjiang District,China Shanghai(201612)
Tel +86 21-5445-1155
Fax +86 21-6405-1472

Doosan Machine Tools Japan
#2412, Mita Kokusai Bldg. 1-4-28 Mita, Minato-ku, Tokyo 108-0073, Japan
Tel +81 3 5730 9013
Fax +81 3 5730 9016

Doosan Machine Tools America
19A Chapin Rd., Pine Brook, NJ 07058, U.S.A.
Tel +1-973-618-2500
Fax +1-973-618-2501

Doosan Machine Tools Europe
Emdener Strasse 24, D-41540 Dormagen, Germany
Tel +49-2133-5067-100
Fax +49-2133-5067-111

Doosan Machine Tools India
106 / 10-11-12, Amruthahalli, Byatarayanapura, Bellary road, Bangalore-560 092, India
Tel +91-80-4266-0122 / 121 / 100

* For more details, please contact Doosan Machine Tools.
* The specifications and information above-mentioned may be changed without prior notice.
* Doosan Machine Tools Co., Ltd. is a subsidiary of MBK Partners. The trademark DOOSAN is used under a licensing agreement with Doosan Corporation, the registered trademark holder.