Ezi-Robo®

Hollow Rotary Geared Actuator

- Hollow Rotary Index Table
- Accurate Gear Driven
- High Reduction Ratio
- High Precision
- High Torque & High Rigidity
- Easy to Use

SUPER HG



FASTECH
Fast, Accurate, Smooth Motion

Features

1. Hollow rotary table

Large Diameter hollow bore to penetrate the output table equipped SHG Series ensure flexibility and convenience in the design of equipment when install complex wiring and piping.

Model Name	Size of plinth(Frame Size)	Hollow Bore Diameter
SHG130	130mm	Ø56mm
SHG170	170mm	Ø85mm



Ex : Only for SHG170

2. Accurate gear driven

Extremely low backlash gear direct drive, so that repetitive positioning accuracy from a single direction is ±15sec, lost motion by positioning from two directions for less than 2 min. and the precise positioning can be determined. And Belt and Pulley are not used in this system so it enables cost saving, unnecessary of maintenance and repair service without adjustment of belt-tensioning.

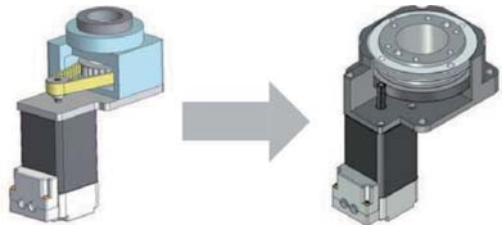

3. High Reduction Ratio & High Torque

Super HG Series offers high gear ratio as 1:20, 1:36 for model SHG170 and 1:18 for model SHG130 so it enables to drive high inertia of load with very strong output torque from hollow rotary table. Also high gear ratio enables minimization of load inertia moment ratio so it realizes smooth operation at Acceleration/Deceleration and no hunting when it stops suddenly.



Model	Gear Ratio	Gear Level
SHG130	18	2nd Stage Gear
SHG170	20, 36	2nd Stage Gear

※ High gear ratio enables high torque output and operation of high inertia of load.

4. High Rigidity

High rigidity of Crossed Roller Bearing and hollow rotary table integrated SHG Series maximizes rigidity of Actuator to support all directions of load as radial load, thrust load and moment load.

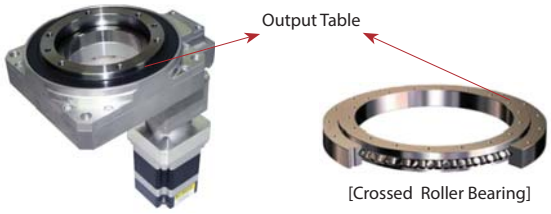

5. Fast response

High rigidity Rotary table fixed to the closed loop stepping control system, Ezi-SERVO can shorten positioning time for big inertia applications.

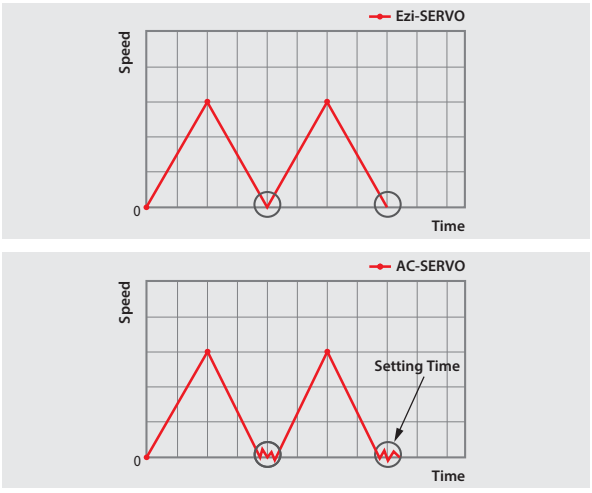

6. Variety of controller with High Performance and Multi-Asking

Ezi-SERVO, high performance closed loop stepping control system by adopting, pulse train input drives and controller integrated drives are possible to use.



Pulse Input drive



Controller Embedded Drive
(Enable to operate Multi-Axes based on Network)

7. Supportiong sudden load fluctuation and rapid acceleration

Adopting a closed loop stepping control system, Ezi-SERVO designed to maintain synchronism and does not have step-out problem, Ezi-Robo SHG series can be driven by rapid acceleration or sudden load fluctuation because the situation in a typical servo system that is prone to fluctuation, Hunting does not occur. For sudden load fluctuatoin with a servo system is essential to improve the control performance does not need to gain adjustment is gain Tuning Free Actuator.

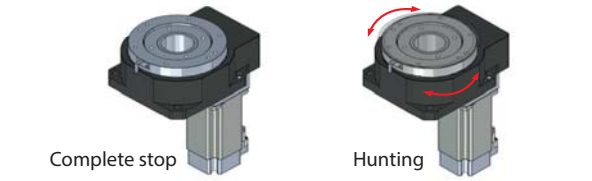

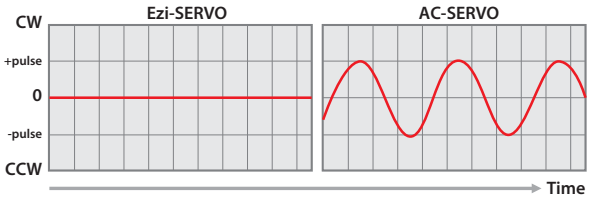

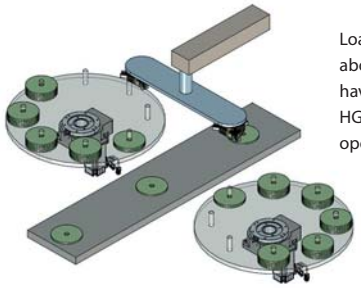

Load variations are concerned about the equipment without having to adjust the gain, HG Series enables stable operation.

8. Network Based Motion Control

A maximum of 16 axis can be operated from a PC through RS-485 commu-nications. All of the Motion conditions are set through the network and saved in Flash ROM as a parameter. Motion Library(DLL) is provided for programming under Windows 2000 / XP / 7 / 8 / Vista.



9. Extensive Input / Output Signals And User-Defined Functions

Input 9 points / 9 points signal output according to the needs of users can be defined. Therefore, various functions depending on the needs of the user input / output wiring must be used without changing.

10. Position Table Function

Position Table can be used for motion control by digital input and output signals of host controller. You can operate the motor directly by sending the position table number, start / stop, origin search and other digital input values from a PLC. The PLC can monitor The In-Position, origin search, moving / stop, servo ready and other digital output signals from a drive. A maximum of 256 positioning points can be set from PLC.



11. Examples of Ezi-Robo SHG Applications

Applications support to changing load intertia fluctuation



Applications for high precision positining



Applications support moment load



Applications for optical applications using hollow bore

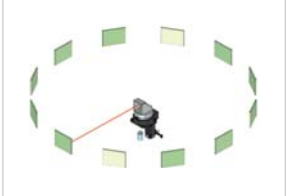

Applications for air absorption using hollow bore

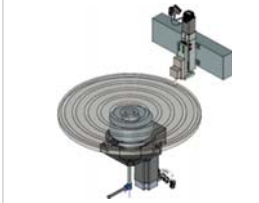

Applications for a precise positioning using hollow bore

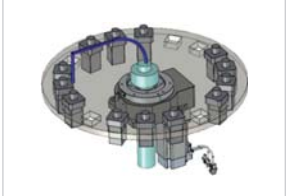

Part Numbering Method

RB-SHG130-60L-18-ST

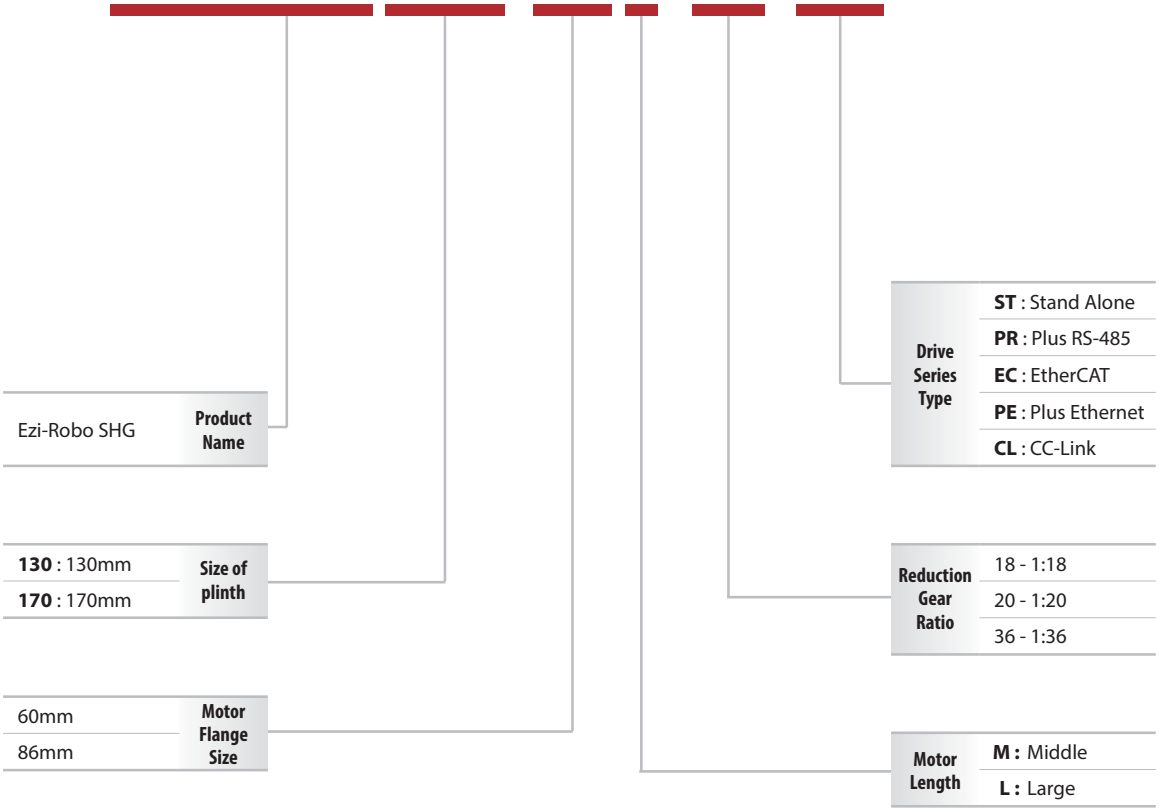

Applicable Product Line-up	Products	Specifications
	Ezi-SERVO ST	Pulse Input Type
	Ezi-SERVO Plus-R	Controller Embedded
	Ezi-SERVO II EtherCAT	Embedded EtherCAT
	Ezi-SERVO II Plus-E	Ethernet based controller integrated product
	Ezi-SERVO II CC-Link	Embedded CC-Link

Applicable Drive Type

Ezi-SERVO ST
(Pulse Input / Standard)



Ezi-SERVO Plus-R
(RS-485 / Standard)



Ezi-SERVO II EtherCAT
(EtherCAT / Standard)



Ezi-SERVO II Plus-E
(Ethernet / Standard)



Ezi-SERVO II CC-Link
(CC-Link / Standard)



Motor, Drive Combination

Ezi-Robo SHG	MOTOR	DRIVE				
		Ezi-SERVO ST	Ezi-SERVO Plus-R	Ezi-SERVO II EtherCAT	Ezi-SERVO II Plus-E	Ezi-SERVO II CC-Link
Applicable Network		Pulse Input	RS-485	EtherCAT	Ethernet	CC-Link
Rb-SHG130-60M-18	EzM-60M-A	O	O	O	O	O
Rb-SHG130-60L-18	EzM-60L-A	O	O	O	O	O
Rb-SHG170-60L-20	EzM-60L-A	O	O	O	O	O
Rb-SHG170-60L-36	EzM-60L-A	O	O	O	O	O
Rb-SHG170-86M-20	EzM-86M-A	O	O			
Rb-SHG170-86M-36	EzM-86M-A	O	O			

※ Ezi-SERVO Ⅱ series motors are applied to EzM2 series motors

How to Read Specification Table

Example of Specification Table

Model Name		Rb-SHG170-60L-20 ST
Type of motor		Ezi-SERVO 60L Step Motor
① Type of output table supporting bearing		Crossed Roller Bearing
② Permissible Torque	(N·m)	170
③ Inertia moment	J :(Kg·m^2)	47,520 x 10^{-6}
④ Permissible speed	(rpm)	150
⑤ Gear ratio		1 : 20
⑥ Maximum Holding Torque	(N·m)	24.7
⑦ Resolution	(ppr)	200,000(=10,000ppr x 20)
⑧ Repetitive Positioning Accuracy	(sec)	±10(0.0028˚)
⑨ Lost Motion	(min)	2(0.033˚)
⑩ Angular transmission error	(min)	4(0.067˚)
⑪ Permissible thrust load	(N)	3,900
⑫ Permissible moment load	(N·m)	152
⑬ Runout of output table surface	(mm)	0.07
⑭ Runout of output table inner/outer diameter	(mm)	0.04
⑮ Parallelism of output table	(mm)	0.07
⑯ Degree of protection IP40		IP40 (IP20 for motor Connector)
⑰ Actuator weight	(Kg)	7.3

Show Description of Specification Items

① Type of output table supporting bearing — The type of the bearing used for the output table.

② Permissible Torque — The limit of mechanical strength of the reduction gear mechanism enables to make sure the applied torque including acceleration torque and load fluctuation and it will not exceed the permissible torque.

③ Inertia moment — Total sum of rotor inertia moment of the motor and the reduction gear of mechanism, converted to a moment on the output table.

④ Permissible speed — The output table speed can be tolerated by the mechanical strength of the reduction gear mechanism.

⑤ Gear ratio — Deceleration mechanism to configure the number of teeth of two gears.

⑥ Maximum Holding Torque — Hollow Rotary actuator can exert the maximum holding torque once the actuator is at standstill with power supplied.

⑦ Resolution — Needed number of pulse to rotate 1 revolution of output table.

⑧ Repetitive Positioning Accuracy — A Value indicates the degree of error which is generated when positioning performs repeatedly to the same position in the same direction.

⑨ Lost Motion — The difference at the stopped angles achieved when the output table is positioned to the same position during forward and reverse direction of motions. And difference is mainly caused by backlash of gear.

⑩ Angular transmission error — The difference between the theoretical rotation angle of the output table and the actual rotation angle. And this value calculated from the input pulse number.

⑪ Permissible thrust load — The permissible value of thrust load applied to the output table in the axial direction.

⑫ Permissible moment load — When a load is applied to a position away from the center of the output table, the output table receives a tilting force and the permissible moment load refers to the permissible value of moment load calculated by multiplying the offset distance from the center by the applied load.

⑬ Runout of output table surface — The maximum value of runout of the mounted surface of the output table when the output table rotates without load.

⑭ Runout of output table inner/outer diameter — The maximum value of runout of the inner diameter or outer diameter of the table when the output table rotates without load.

⑮ Parallelism of output table — Actuator(plinth base) installed on the output side of the Table and value that indicates whether the degree inclines.

⑯ Degree of protection IP40(IP20 for motor connector) — IEC 60529, EN60034-5(= IEC60034-5) classifies the dust resistance and waterproofing into grades.

⑰ Mass — A sum of Actuator configured as the output Table, deceleration mechanism, such as driving motor plus the weight of all components.

Motor Specification Table

SHG130 Series

Model Name		Rb-SHG130-60M-18					Rb-SHG130-60L-18				
		ST	PR	EC	PE	CL	ST	PR	EC	PE	CL
Type of motor		Ezi-SERVO 60M Step Motor					Ezi-SERVO 60L Step Motor				
Type of output table supporting bearing		Crossed Roller Bearing					Crossed Roller Bearing				
Permissible Torque	(N·m)	34					34				
Inertia moment	J :(Kg·m^2)	15,718 x 10^{-6}					31,270 x 10^{-6}				
Permissible speed	(rpm)	200					200				
Gear ratio		1 : 18					1 : 18				
Maximum Holding Torque	(N·m)	11.0					22.3				
Resolution	(ppr)	180,000(=10,000ppr x 18)					180,000(=10,000ppr x 18)				
Repetitive Positioning Accuracy	(sec)	±10(0.0028°)					±10(0.0028°)				
Lost Motion	(min)	2(0.033°)					2(0.033°)				
Angular transmission error	(min)	4(0.067°)					4(0.067°)				
Permissible thrust load	(N)	2,000					2,000				
Permissible moment load	(N·m)	50					50				
Runout of output table surface	(mm)	0.07					0.07				
Runout of output table inner/outer diameter	(mm)	0.04					0.04				
Parallelism of output table	(mm)	0.07					0.07				
Degree of protection IP40		IP40 (IP20 for motor Connector)					IP40 (IP20 for motor Connector)				
Actuator weight	(Kg)	5.6					6.3				

Ezi-Robo SHG130_ 60M Series

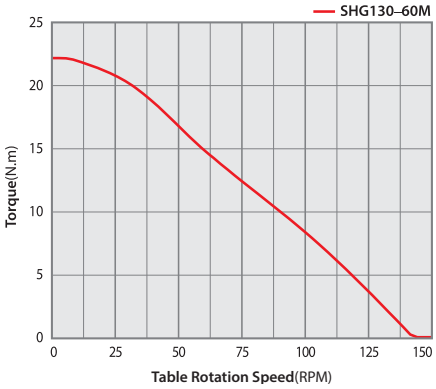

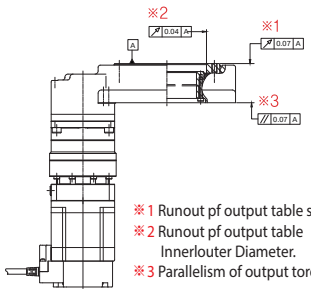

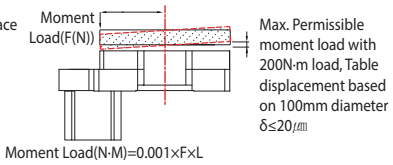

Ezi-Robo SHG130_ 60L Series

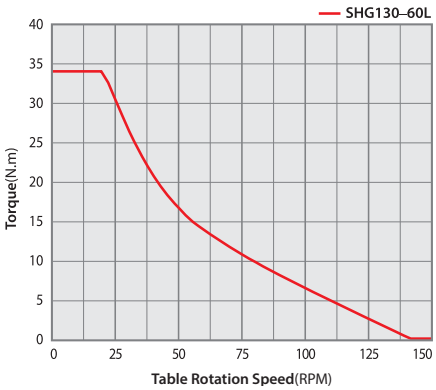

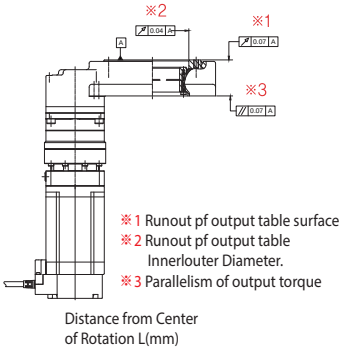

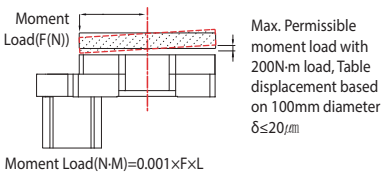

SHG170 Series(Ratio 1:20)

Model Name		Rb-SHG170-60L-20					Rb-SHG170-86M-20		
		ST	PR	EC	PE	CL	ST	PR	EC
Type of motor		Ezi-SERVO 60L Step Motor					Ezi-SERVO 86M Step Motor		
Type of output table supporting bearing		Crossed Roller Bearing					Crossed Roller Bearing		
Permissible Torque	(N·m)	170					170		
Inertia moment	J :(Kg·m^2)	47,520 x 10^{-6}					74,840 x 10^{-6}		
Permissible speed	(rpm)	150					150		
Gear ratio		1 : 20					1 : 20		
Maximum Holding Torque	(N·m)	24.7					37.2		
Resolution	(ppr)	200,000(=10,000ppr x 20)					200,000(=10,000ppr x 20)		
Repetitive Positioning Accuracy	(sec)	±10(0.0028˚)					±10(0.0028˚)		
Lost Motion	(min)	2(0.033˚)					2(0.033˚)		
Angular transmission error	(min)	4(0.067˚)					4(0.067˚)		
Permissible thrust load	(N)	3,900					3,900		
Permissible moment load	(N·m)	152					152		
Runout of output table surface	(mm)	0.07					0.07		
Runout of output table inner/outer diameter	(mm)	0.04					0.04		
Parallelism of output table	(mm)	0.07					0.07		
Degree of protection IP40		IP40 (IP20 for motor Connector)					IP40 (IP20 for motor Connector)		
Actuator weight	(Kg)	7.3					8.0		

Ezi-Robo SHG170_ 60L Series

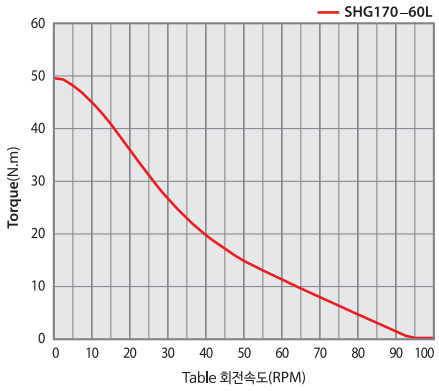

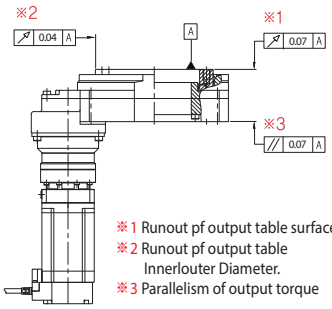

※1 Runout pf output table surface
※2 Runout pf output table Innerlouter Diameter.
※3 Parallelism of output torque

Distance from Center of Rotation L(mm)

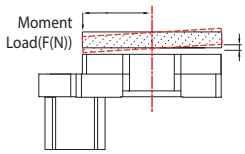

Moment Load(N·M)=0.001×F×L

Max. Permissible moment load with 200N·m load, Table displacement based on 100mm diameter δ≤20㎛

Ezi-Robo SHG170_ 86M Series

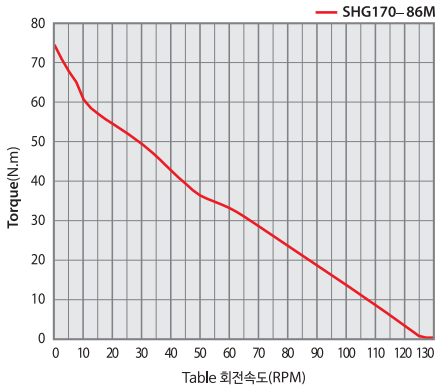

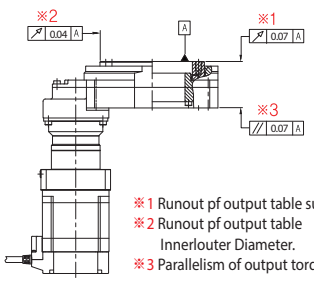

※1 Runout pf output table surface
※2 Runout pf output table Innerlouter Diameter.
※3 Parallelism of output torque

Distance from Center of Rotation L(mm)

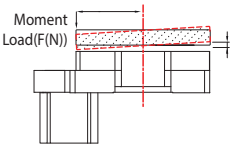

Moment Load(N·M)=0.001×F×L

Max. Permissible moment load with 200N·m load, Table displacement based on 100mm diameter δ≤20㎛

SHG170 Series(Ratio 1:36)

Model Name		Rb-SHG170-60L-36					Rb-SHG170-86M-36		
		ST	PR	EC	PE	CL	ST	PR	EC
Type of motor		Ezi-SERVO 60L Step Motor					Ezi-SERVO 86M Step Motor		
Type of output table supporting bearing		Crossed Roller Bearing					Crossed Roller Bearing		
Permissible Torque	(N·m)	107					107		
Inertia moment	J :(Kg·m^2)	123,510 x 10^{-6}					212,030 x 10^{-6}		
Permissible speed	(rpm)	150					150		
Gear ratio		1 : 36					1 : 36		
Maximum Holding Torque	(N·m)	44.6					67.0		
Resolution	(ppr)	360,000(=10,000ppr x 36)					360,000(=10,000ppr x 36)		
Repetitive Positioning Accuracy	(sec)	±10(0.0028°)					±10(0.0028°)		
Lost Motion	(min)	2(0.033°)					2(0.033°)		
Angular transmission error	(min)	4(0.067°)					4(0.067°)		
Permissible thrust load	(N)	4,000					4,000		
Permissible moment load	(N·m)	200					200		
Runout of output table surface	(mm)	0.07					0.07		
Runout of output table inner/outer diameter	(mm)	0.04					0.04		
Parallelism of output table	(mm)	0.07					0.07		
Degree of protection IP40		IP40 (IP20 for motor Connector)					IP40(□□, □□□ □□ IP20)		
Actuator weight	(Kg)	7.3					8.0		

Ezi-Robo SHG170_ 60L Series

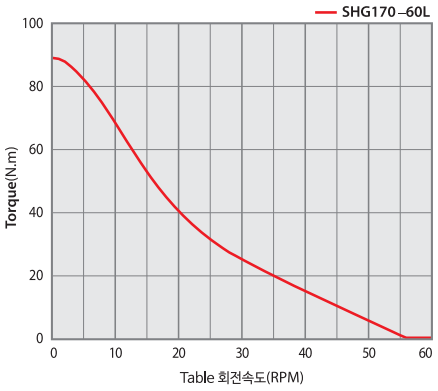

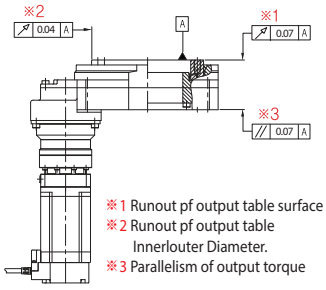

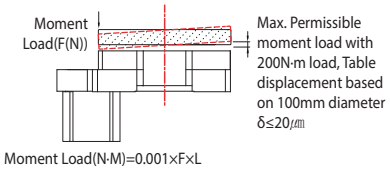

Ezi-Robo SHG170_ 86M Series

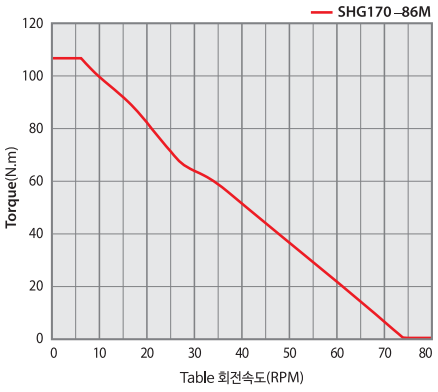

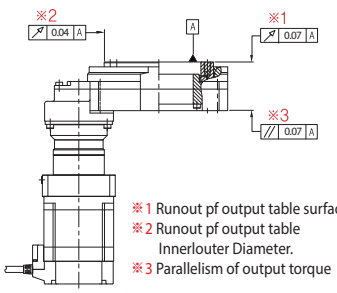

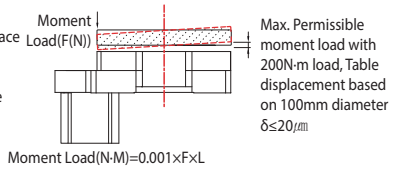

Drawings for SHG Series

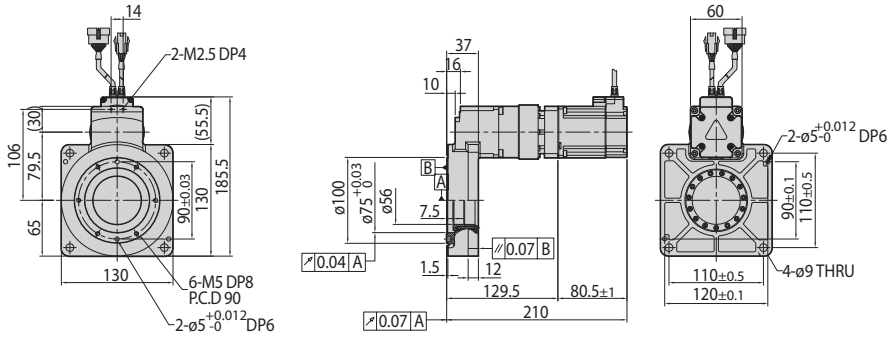

130mm

Model Name	Length(L)
EzM-60M	55

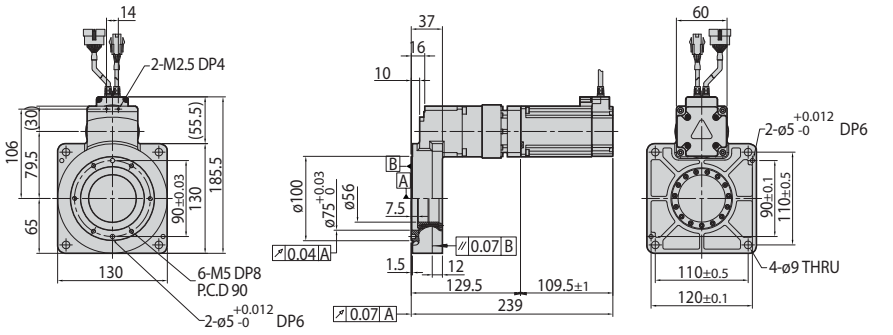

130mm

Model Name	Length(L)
EzM-60L	85

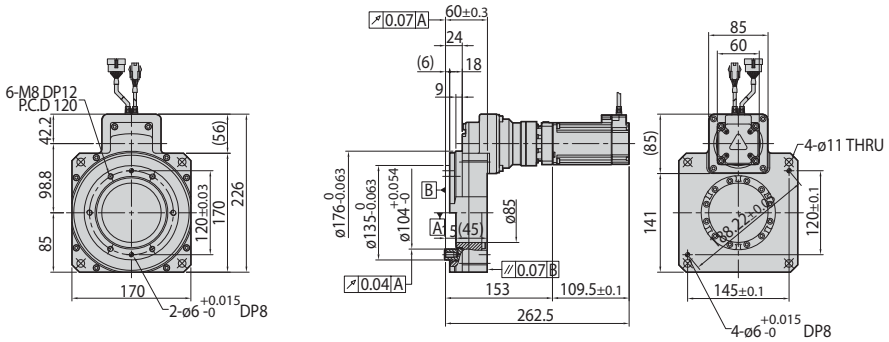

170mm

Model Name	Length(L)
EzM-60L	85

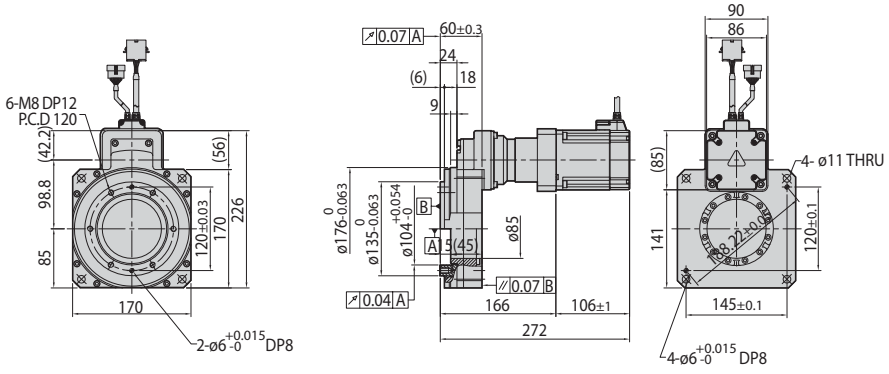

170mm

Model Name	Length(L)
EzM-86M	78

Mechanical Part Option

Home-sensor Set

Rotary table drive less frequently required to perform homing Photo Micro Sensor, Connector Attach Cable, blue filter, install the screws to Set Sensor Set the origin has been established as an option. There needed to detect the origin because the origin of all parts of tne installation when necessary Sensor takes part in designing manufacturing and parts procurement to relieve the trouble, it also can be used to install easily.

1. Type

Model	Sensor output	Applicable product
OSHG-A	NPN	SHG130, SHG170
OSHG-B	PNP	

2. Home-sensor Set Composition OSHB-A



3. Specifications

Type	NPN Type	PNP Type
Sensor Model Name	EE-SX672A(OMRON Product) SHG130, SHG170	EE-SX672A(OMRON Product) SHG130, SHG170
Input Voltage	DC5-24V ±10% Ripple(P-P) 10% less	DC 5-24V ±10%, Ripple(P-P) 10% less
Current Consumption	35mA less	30mA less
Control Output	NPN Open Collector output DC5~24V 100mA less Residual Voltage 0.8V less(at load current of 100mA)	PNP Open Collector output DC5 ~ 24V 100mA less Residual Voltage 1.3V less(at load current of 100mA)
Display LED	Detection(Red)	Detection(Red)
Sensor Logic	Normally Open / Normally Closed (Switchable, Depending on connection)	Normally Open / Normally Closed (Switchable, Depending on connection)

4. Connector Attached Cable(OMRON robot ode attached connector EE1010-R)

• **Terminal Layout**

①	⊕	Brown
②	L	Pink
③	OUT	Black
④	⊖	Blue



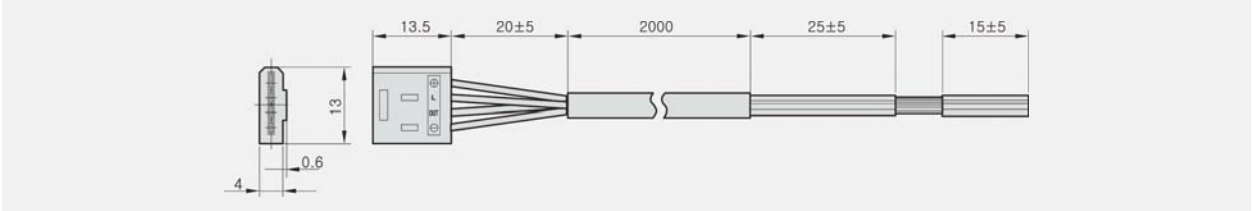

5. Notes for sensor set of installation

Option to install is the origin sensor set pay attention to the following.

- Use tne temperature below 40℃, Motor Part surface temperature 90℃ or less, to be sure to set operating conditions
- Please prepare individual sensor and Bracket to get homing with using from motor shaft. Notes for sensor lines is extended. Sensor shield should be cabled and grounded if extended to more than 2 Meter long.

6. Notes for sensor lines is extended

Sensor shield should be cabled and grounded if extended to more than 2 Meter long.

Dimensions of Home-sensor Installation

1. NPN Type

Please use DC 5V, DC 24V power supply or less and consult the current value less than 100mA. If more than100mA, please connect external register R. And sensor power supply and user controller power supply GND should be a common.

• Pulse Train Input unit

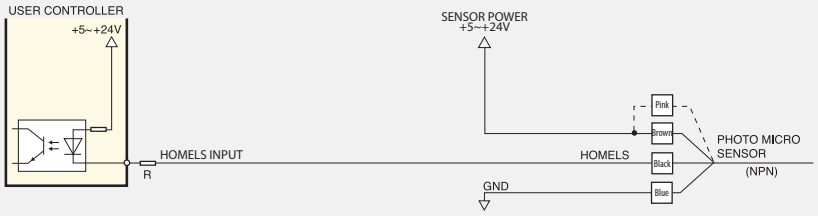

Pink lead wire N.C(Normally Closed) needs to be connected with brown lead wire.
N.O(Normally Open) : Pink lead wire is not connected.

• Controller integrated unit

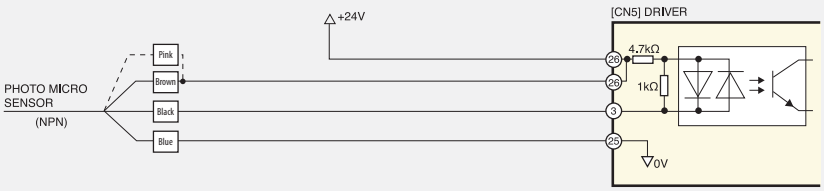

Pink lead wire N.C(Normally Closed) needs to be connected with brown lead wire.
N.O(Normally Open) : Pink lead wire is not connected.

2. PNP Type

Please use DC 5V, DC power supply or less and consult the current value less than 100mA. If more than 50mA, please connect external register R.

• Pulse Train Input unit



Pink lead wire N.C(Normally Closed) needs to be connected with brown lead wire.
N.O(Normally Open) : Pink lead wire is not connected.

• Controller integrated unit

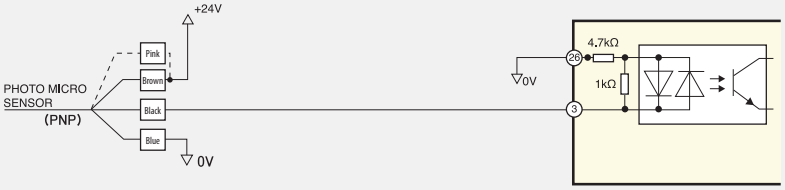

Pink lead wire N.C(Normally Closed) needs to be connected with brown lead wire.
N.O(Normally Open) : Pink lead wire is not connected.

Product Installation Method

How to Install the Ezi-Robo SHG

Please refer to the installation method as shown in the picture when attach the actuator to mounting plate in the case of applying SHG series.

1. How to Install to the Mounting Plate (If the TAP Hole is exist on the mounting plate)

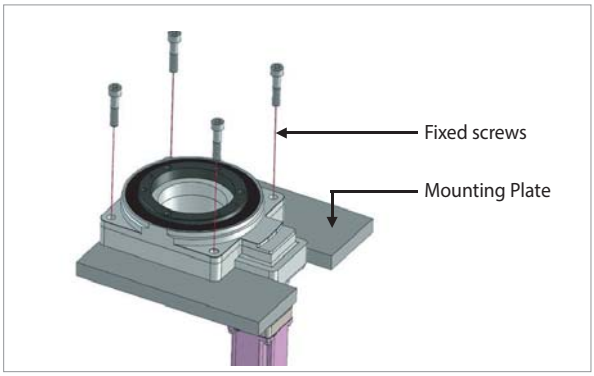

• The bolt specifications

Model Name	Dimension
Ezi-Robo SHG170	M10 × 45L
Ezi-Robo SHG130	M8 × 20L

※ Please refer to the table to find the bolt dimension.
If non-standard bolt is used, it may cause damage to the product, therefore the standard bolt must be used.

2. How to Install to the Actuator Pilot

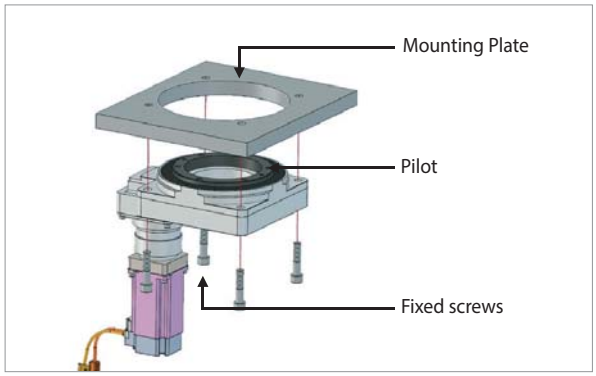

• The bolt specifications

Model Name	Dimension
Ezi-Robo SHG170	M10 × 45L

• Pilot Dimension

Model Name	Dimension
Ezi-Robo SHG170	$\Phi 176\ ^{0}_{-0.063}$

System Configuration

Pulse Train Input Drives



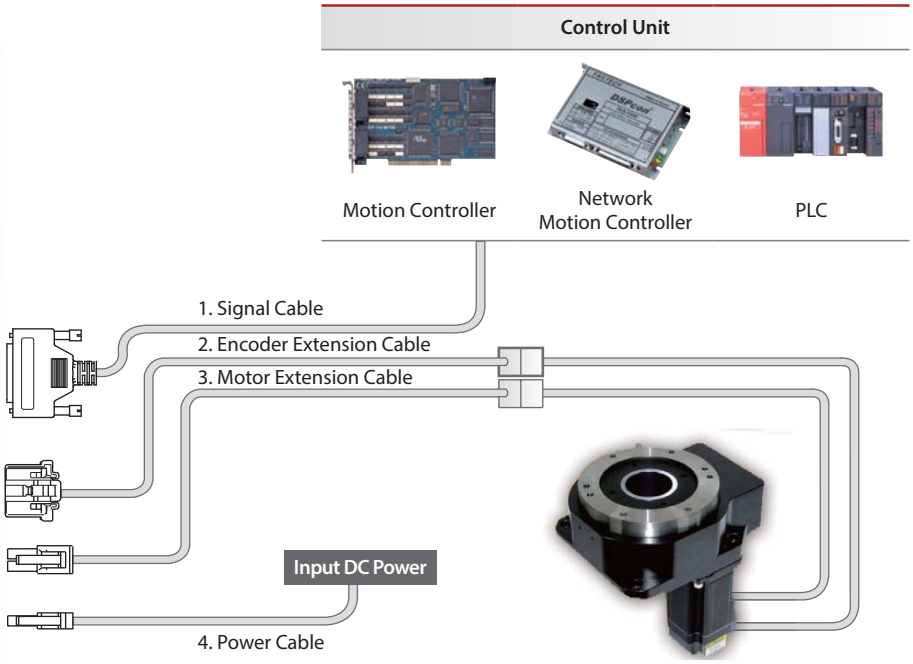

Pulse Train Input Drives(86mm)



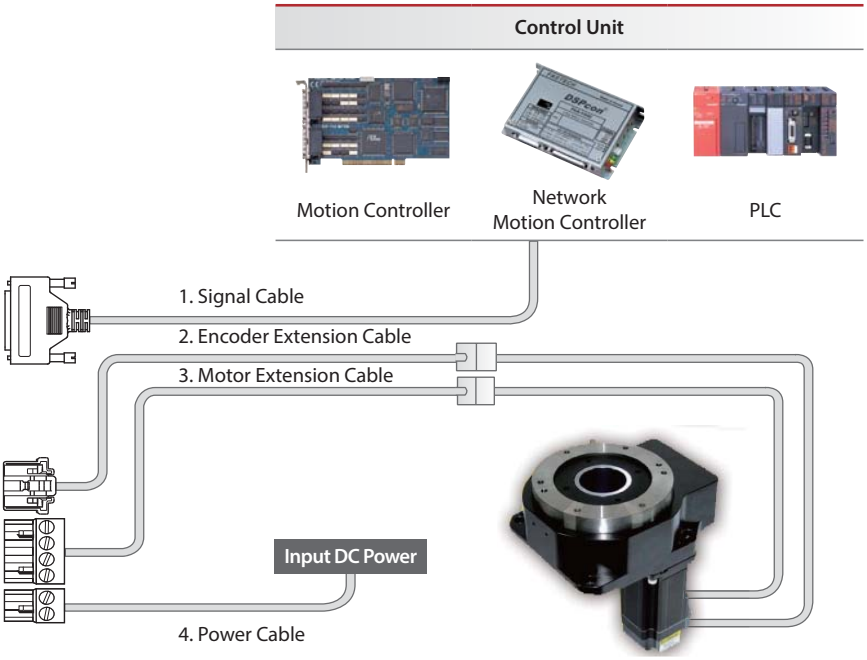

Controller Integrated Drive(RS-485)

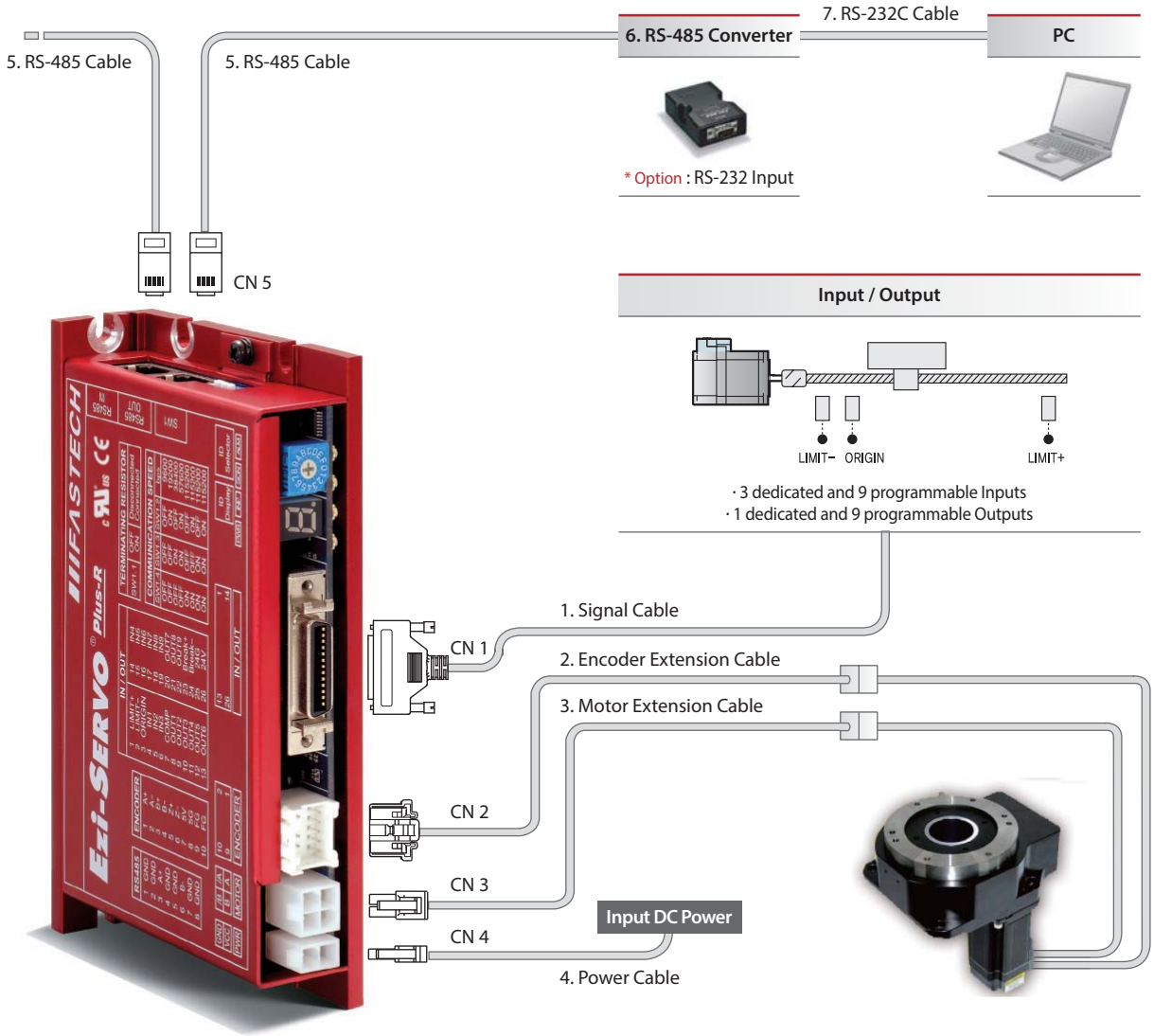

Controller Integrated Drive(86mm RS-485)

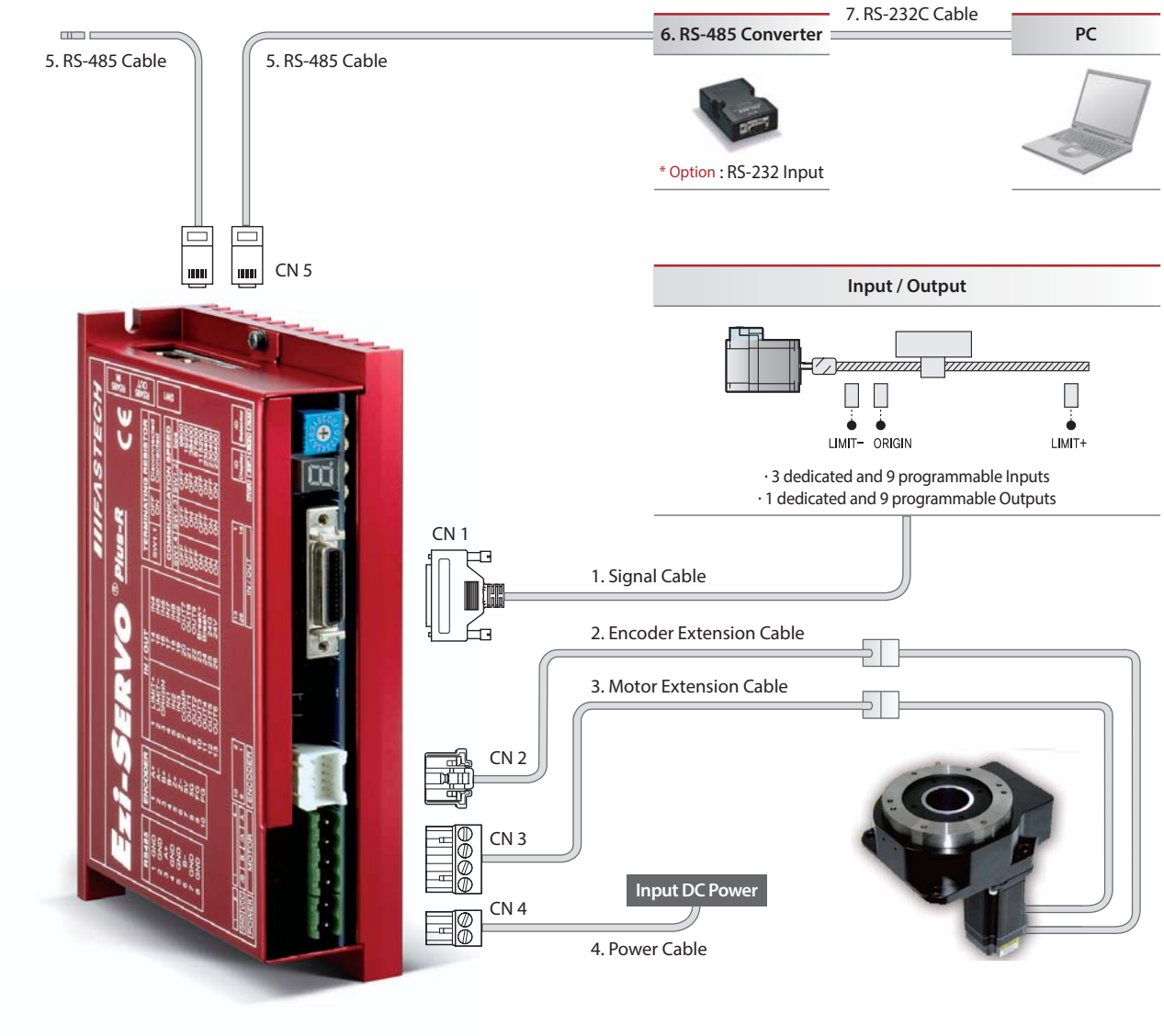

EtherCAT

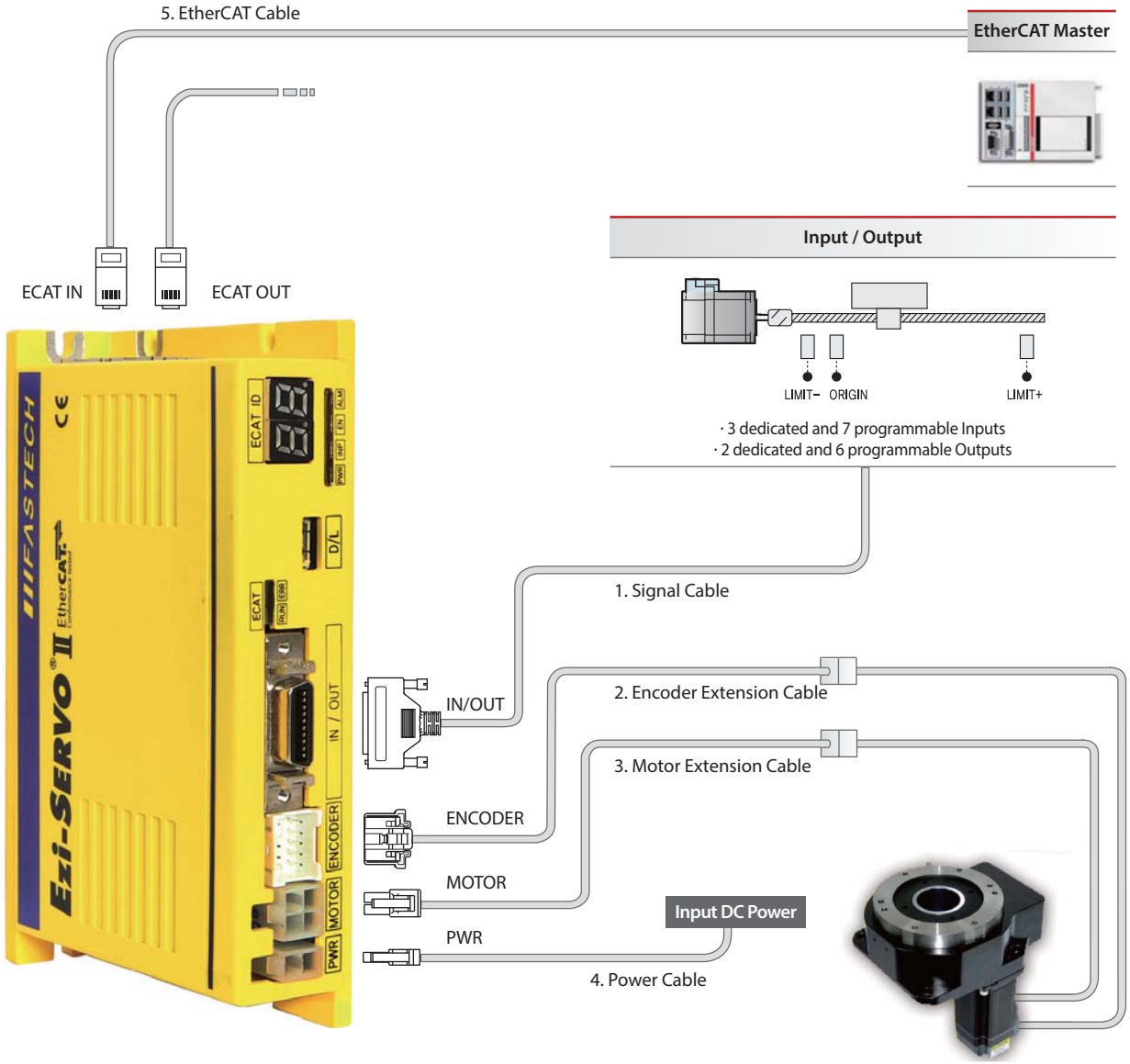
5. EtherCAT Cable
EtherCAT Master
Input / Output
ECAT IN
ECAT OUT
LIMIT−
ORIGIN
LIMIT+
· 3 dedicated and 7 programmable Inputs
· 2 dedicated and 6 programmable Outputs
1. Signal Cable
IN/OUT
2. Encoder Extension Cable
3. Motor Extension Cable
ENCODER
MOTOR
Input DC Power
PWR
4. Power Cable
FASTECH
Ezi-SERVO II
ECAT ID
D/L
ECAT
IN / OUT
ENCODER
MOTOR
PWR

Ethernet

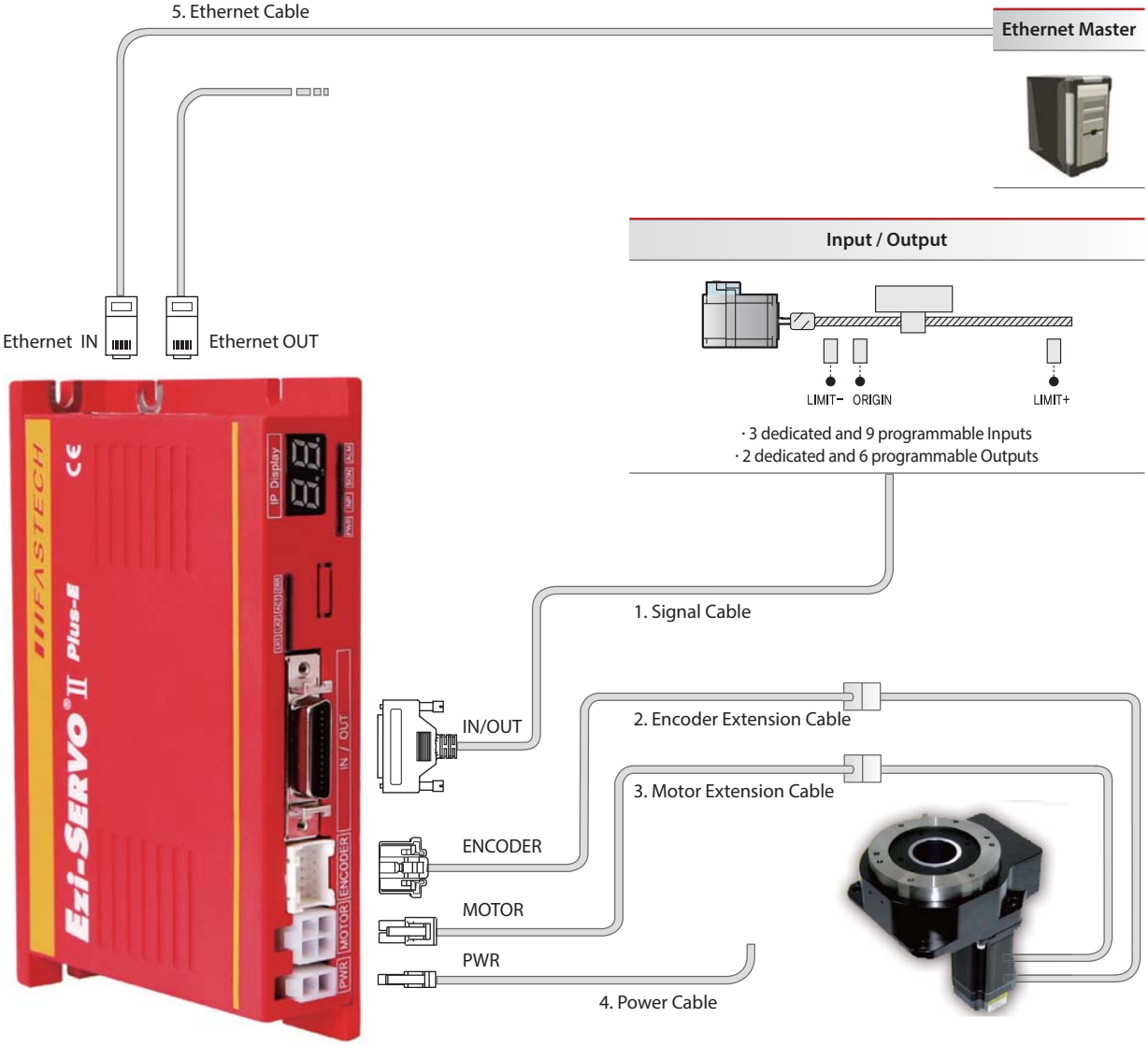
5. Ethernet Cable
Ethernet Master
Input / Output
LIMIT−
ORIGIN
LIMIT+
· 3 dedicated and 9 programmable Inputs
· 2 dedicated and 6 programmable Outputs
Ethernet IN
Ethernet OUT
1. Signal Cable
IN/OUT
2. Encoder Extension Cable
3. Motor Extension Cable
ENCODER
MOTOR
PWR
4. Power Cable
Ezi-SERVO II Plus-E
FASTECH
IP Display
IN / OUT
ENCODER
MOTOR
PWR

CC-Link

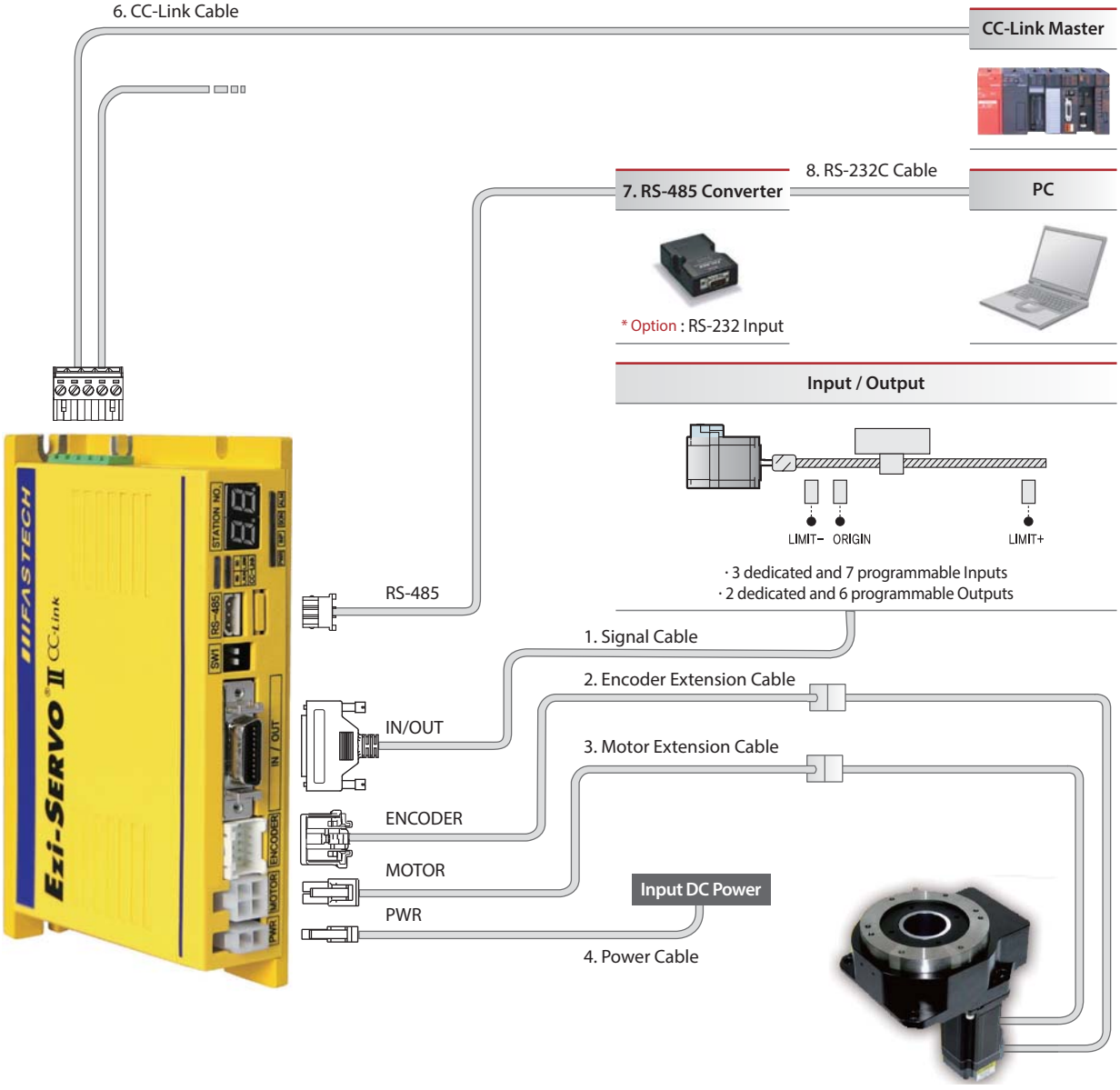

6. CC-Link Cable
CC-Link Master
8. RS-232C Cable
7. RS-485 Converter
PC
* Option : RS-232 Input
Input / Output
LIMIT−
ORIGIN
LIMIT+
· 3 dedicated and 7 programmable Inputs
· 2 dedicated and 6 programmable Outputs
RS-485
1. Signal Cable
2. Encoder Extension Cable
IN/OUT
3. Motor Extension Cable
ENCODER
MOTOR
Input DC Power
PWR
4. Power Cable
FASTECH
Ezi-SERVO II CC-Link
STATION NO.
RS-485
SW1
IN / OUT
ENCODER
MOTOR
PWR

Dimension of Home-sensor Installation

Ezi-Robo SHG130-60M

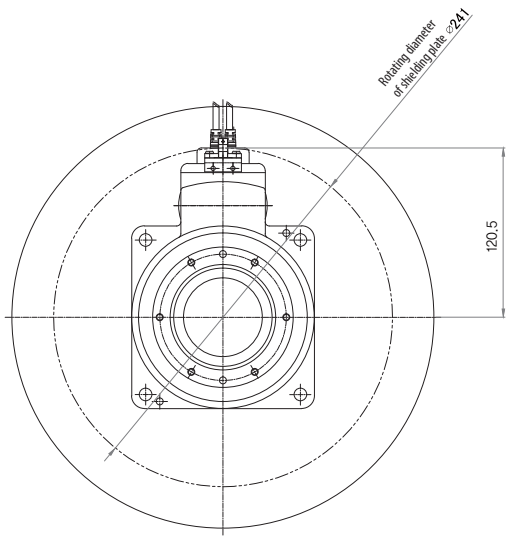

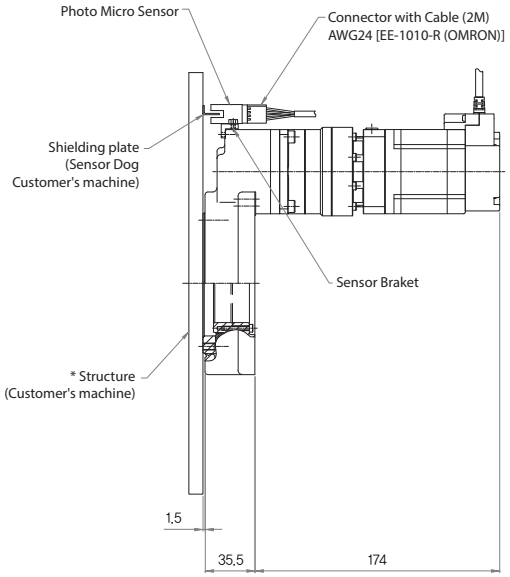

Ezi-Robo SHG130-60L

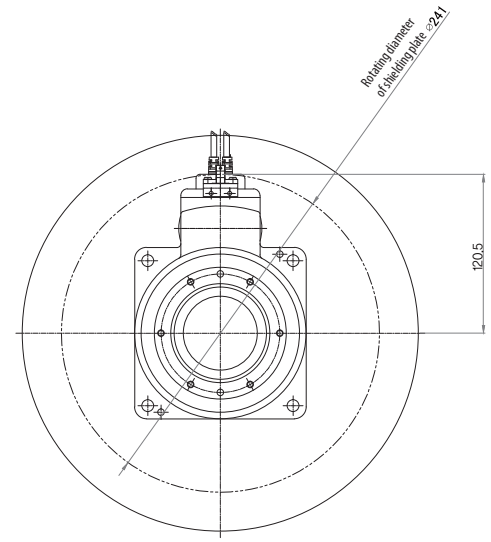

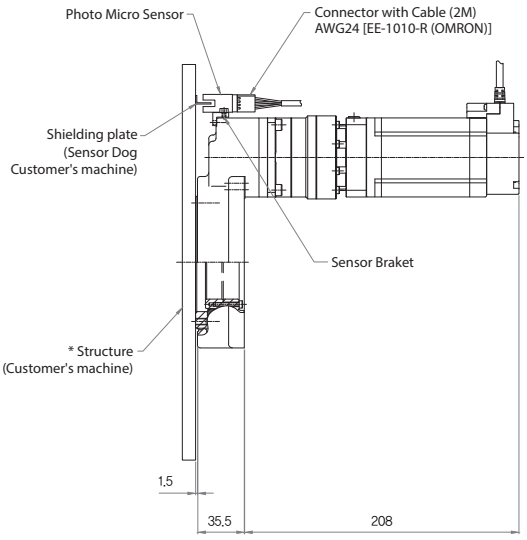

Ezi-Robo SHG170-60L

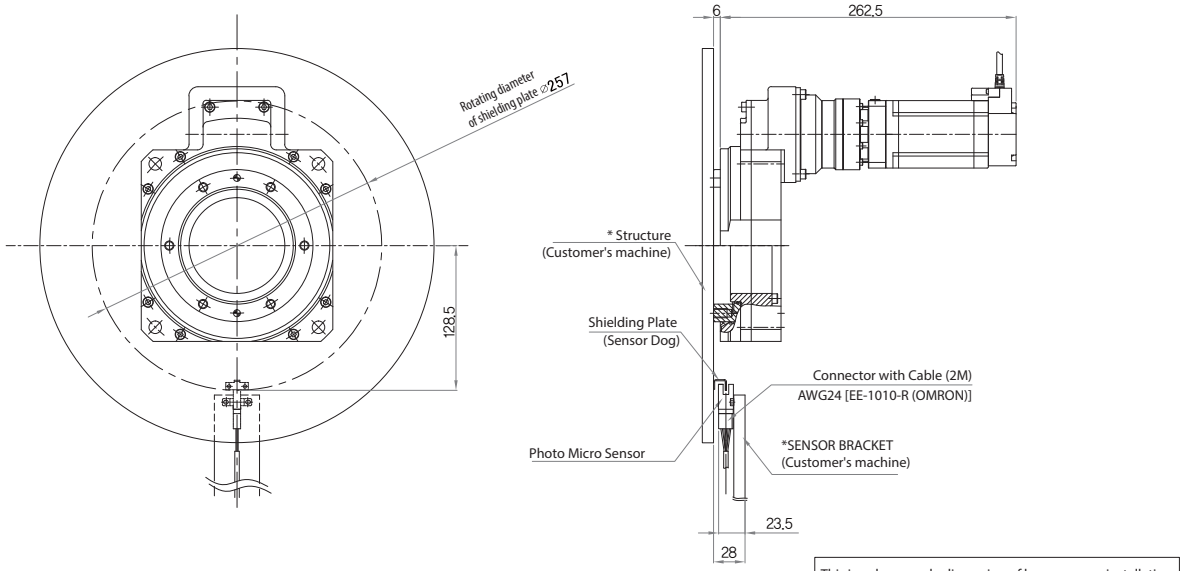

Ezi-Robo SHG170-86M

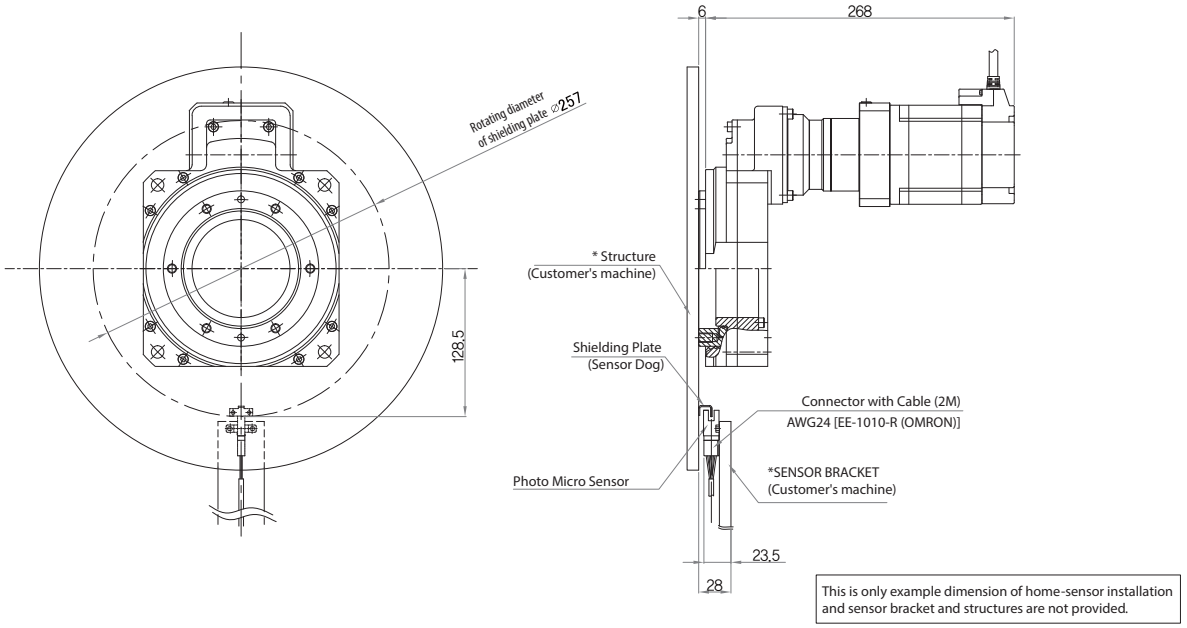

FASTECH

Fast, Accurate, Smooth Motion

FASTECH Co., Ltd.
Rm#1202, 401-dong, Bucheon Techno-Park,
655, Pyeongcheon-ro, Bucheon-si Gyeonggi-do,
Republic of Korea (Zip:14502)
TEL : +82-32-234-6300 FAX : +82-32-234-6302
E-mail : fastech@fastech.co.kr
Homepage : www.fastech.co.kr

©Copyright 2007 FASTECH Co., Ltd.
All Rights Reserved. Feb 27, 2018 Rev.04