Loudspeaker Specification Sheet

Model Number : BH12L099

Revision : Rev 00.
Date : 20.JUN.17

Features:

- Driver Type : Passive Radiator
- Size : 83mm (3.2inch)
- Magnet : N/A
- Frame : Steel
- Diaphragm : Polypropylene

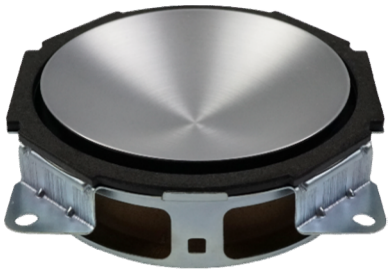

Specifications:

- Rated Power Handling : -W (RMS)
- Characteristic Sensitivity : -dB ± -dB (1W/1m)
- Nominal Impedance : -Ω
- Free Air Resonance Frequency, fs : -Hz ± 20%
- Frequency Range : fs ~ -kHz ± 20%
- Voice Coil Inner Diameter : - (mm)
- Net Weight : 84g (2.9oz)

Dimensions & Mounting Information:

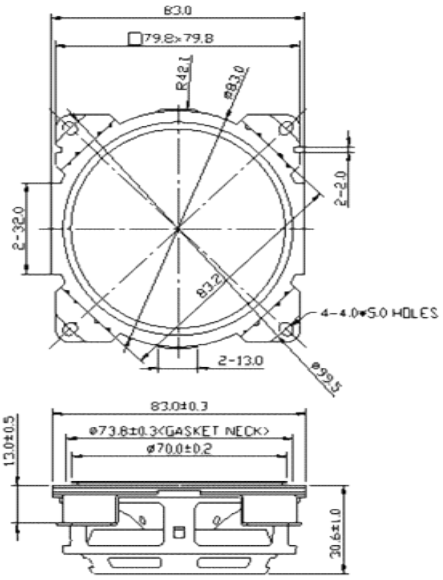

Frequency & Impedance Response:

N/A

http://www.bhacoustic.com
105, Sinwon-ro, Yeongtong-gu, Suwon-si, Gyeonggi-do, Republic of Korea 16678
Tel : +82(31)-206-5477 Fax : +82-(21)-206-5473