Copyright 2021. HITROL CO., LTD all rights reserved.

CAPACITANCE TYPE LEVEL TRANSMITTER

HT-100CT Series



ISO 9001 ISO 14001 ASME

www.hitrol.com

Always The Best Solution

HITROL CO., LTD.

Overview

HT-100CT Series is a Capacitance Type Level Transmitter which continuously measures liquid levels using of liquid's dielectric constant. It can be easily installed and adjusted, and can be easily applied to corrosive liquids and widely used in general industries, chemical and oil plants.

Characteristics

- Widely used to measure various liquid levels
- Strong structure and semi-permanent life cycle due to moveless part
- Various probe types for wide application
- Easy installation of wire type (HT-100CTW / HT-100CTW-2)
- Applicable to corrosive liquid
- Interface measurement between water and oil is available.
- Applicable to explosion area (HPC-100CT / HPC-100CT-2)
- NAMUR NE43 is applied.

Operation Principle

When there are two conductors insulated each other, the value of capacitance formed between two conductors is a function of the sizes of two conductors, relative location of two conductors and the dielectric constant of material placed between two conductors. Under the conduction that air of dielectric constant ε1 exists in the space between two concentric conductors, lower part of space between two conductors is filled with material of dielectric constant ε2 as shown below, the change of capacitance is expressed as follows.

$$\Delta C = \frac{(\varepsilon_2 - \varepsilon_1) \times l}{\log_{10} D/d} \text{ [pF]}$$

Since $\frac{(\varepsilon_2 - \varepsilon_1)}{\log_{10} D/d}$ is a constant value as an initial condition, and get this value as K, ΔC becomes a function of level of material only. Therefore, level can be obtained through the measurement of ΔC.

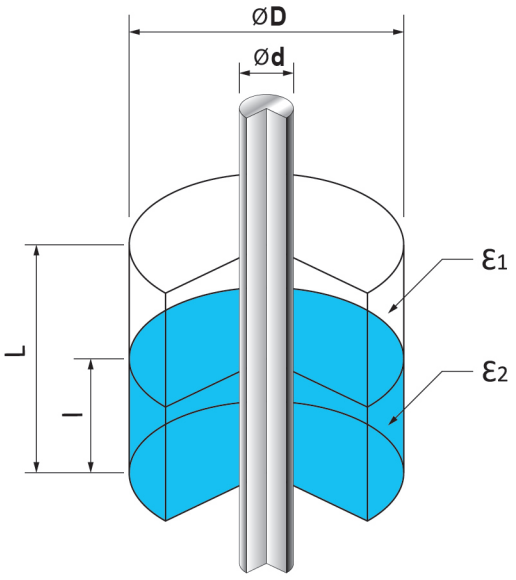

ε_1 : Dielectric constant of air
ε_2 : Dielectric constant of medium
L : Height of tank
l : Level of medium
D : Outer diameter of tank
d : Outer diameter of sensing probe

CAPACITANCE TYPE LEVEL TRANSMITTER
HT-100CT Series

Specification

▶ HT-100CT Series : Remote Version (Weather Proof Version)

Model	HT-100CT	HT-100CTH	HT-100CTW	HT-100CTWH
Probe Type	Rod		Wire	
Mounting	Screw & Flange			
Ambient Temperature	-20°C ~ +60°C			
Process Temperature	-40°C ~ +80°C	-40°C ~ +150°C	-40°C ~ +80°C	-40°C ~ +150°C
Process Pressure	Vacuum ~ 20kg/cm² (300#)			
Signal Transmitter	Analogue 3-Wire			
Enclosure	Weather Proof (PBT : IP65, Aluminum : IP66)			
Wetted Parts Material	SUS 316L + Teflon			
Process Connection	PT 1″(M) (std.)		50A JIS 10K RF (std.)	
Housing Material	PBT (std.), Aluminum (opt.)			
Cable Entry	PF 1/2"(F)(std.)			
Measuring Range	Max. 3m		Max. 15m	
Accuracy	±1% F.S			
Combination Unit	HLC-100C-P (Power Source : AC 110V/220V)			

▶ HPC-100CT Series : Remote Version (Ex-Proof Version)

Model	HPC-100CT	HPC-100CTH	HPC-100CTW	HPC-100CTWH
Probe Type	Rod		Wire	
Mounting	Screw & Flange			
Ambient Temperature	-20°C ~ +60°C			
Process Temperature	-40°C ~ +80°C	-40°C ~ +150°C	-40°C ~ +80°C	-40°C ~ +150°C
Process Pressure	Vacuum ~ 20kg/cm² (300#)			
Signal Transmitter	Analogue 3-Wire			
Enclosure	Ex-Proof (Ex d IIC T6)	Ex-Proof (Ex d IIC T4)	Ex-Proof (Ex d IIC T6)	Ex-Proof (Ex d IIC T4)
Wetted Parts Material	SUS 316L + Teflon			
Process Connection	PT 1″(M) (std.)		50A JIS 10K RF (std.)	
Housing Material	Aluminum			
Cable Entry	PF 3/4″(F) (std.)			
Measuring Range	Max. 3m		Max. 15m	
Accuracy	±1% F.S			
Combination Unit	HLC-100C-P (Power Source : AC 110V/220V), Non Ex-Zone			

▶ **Order Code** can be printed at our website (www.hitrol.com)

Specification

▶ HT-100CT-2 Series : Compact Version (Weather Proof Version)

Model	HT-100CT-2	HT-100CTH-2	HT-100CTW-2	HT-100CTWH-2
Probe Type	Rod		Wire	
Mounting	Screw & Flange			
Ambient Temperature	-20°C ~ +60°C			
Process Temperature	-40°C ~ +80°C	-40°C ~ +150°C	-40°C ~ +80°C	-40°C ~ +150°C
Process Pressure	Vacuum ~ 20kg/cm² (300#)			
Power Source	DC 24V			
Output	DC 4~20mA (2-wire)			
Enclosure	Weather Proof (PBT: IP65, Aluminum: IP66)			
Wetted Parts Material	SUS 316L + Teflon			
Process Connection	PT 1" (M) (std.)		50A JIS 10K RF (std.)	
Housing Material	PBT (std.), Aluminum (opt.)	Aluminum	PBT (std.), Aluminum (opt.)	Aluminum
Cable Entry	PF 1/2"(F)(std.)			
Measuring Range	Max. 3m		Max. 15m	
Accuracy	±1% F.S			

▶ HPC-100CT-2 Series : Compact Version (Ex-Proof Version)

Model	HPC-100CT-2	HPC-100CTH-2	HPC-100CTW-2	HPC-100CTWH-2
Probe Type	Rod		Wire	
Mounting	Screw & Flange			
Ambient Temperature	-20°C ~ +60°C			
Process Temperature	-40°C ~ +80°C	-40°C ~ +150°C	-40°C ~ +80°C	-40°C ~ +150°C
Process Pressure	Vacuum ~ 20kg/cm² (300#)			
Power Source	DC 24V			
Output	DC 4~20mA (2-wire)			
Enclosure	Ex-Proof (Ex d IIC T6)	Ex-Proof (Ex d IIC T4)	Ex-Proof (Ex d IIC T6)	Ex-Proof (Ex d IIC T4)
Wetted Parts Material	SUS 316L + Teflon			
Process Connection	PT 1" (M) (std.)		50A JIS 10K RF (std.)	
Housing Material	Aluminum			
Cable Entry	PF 3/4" (F) (std.)			
Measuring Range	Max. 3m		Max. 15m	
Accuracy	±1% F.S			

▶ **Order Code** can be printed at our website (www.hitrol.com)

Dimension

Standard Version

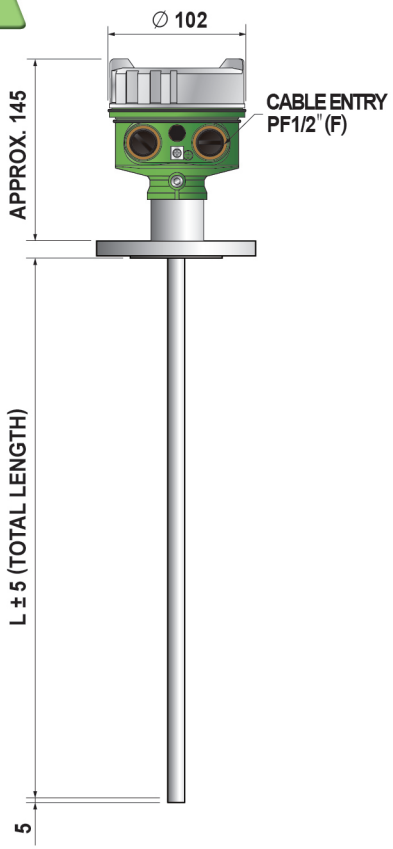

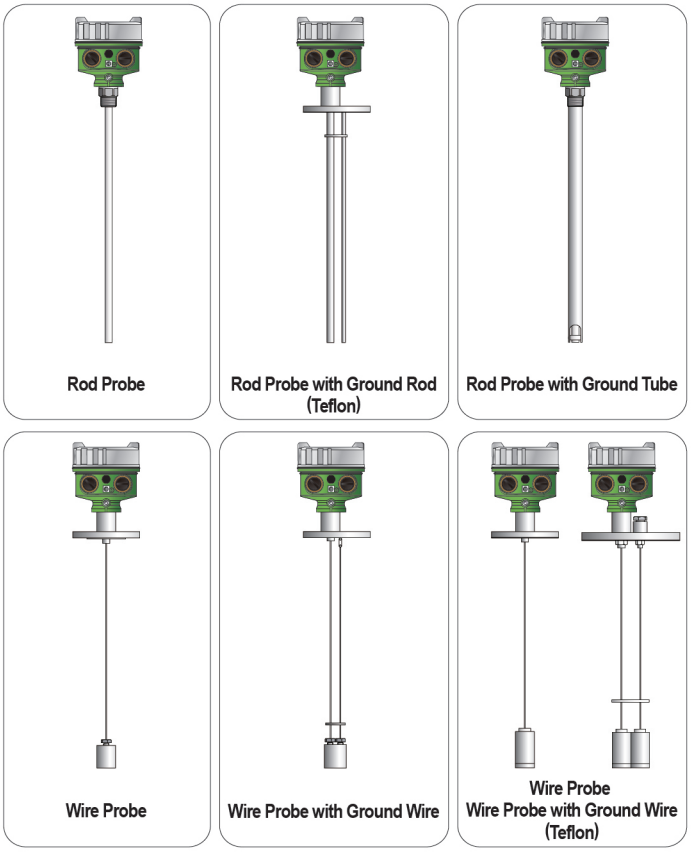

High Temperature Version

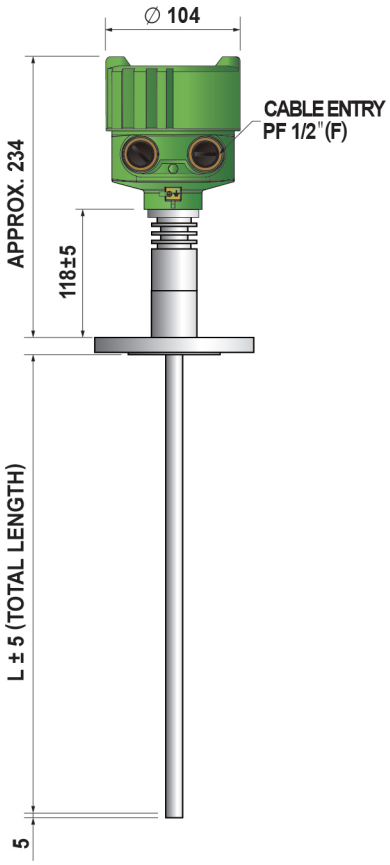

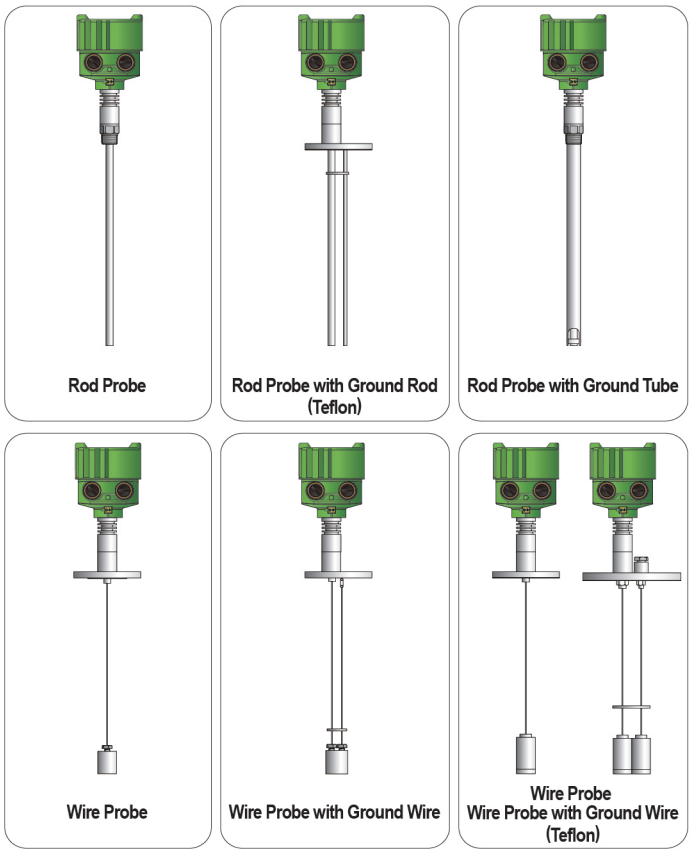

■ Actual product may have a tolerance slightly.

Dimension

Ex-Proof Version

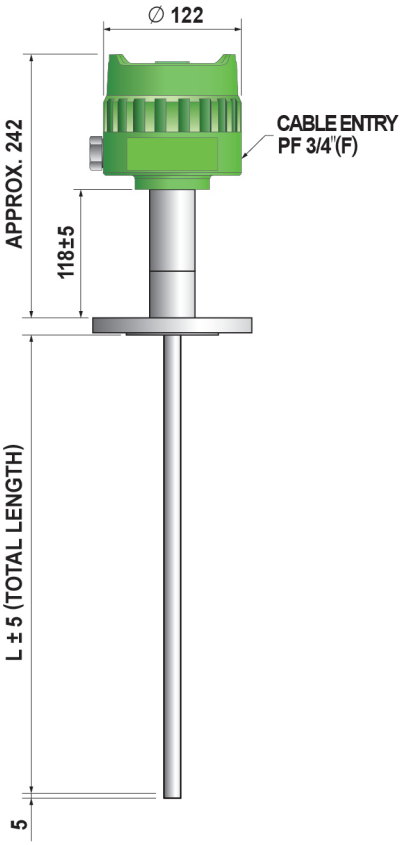

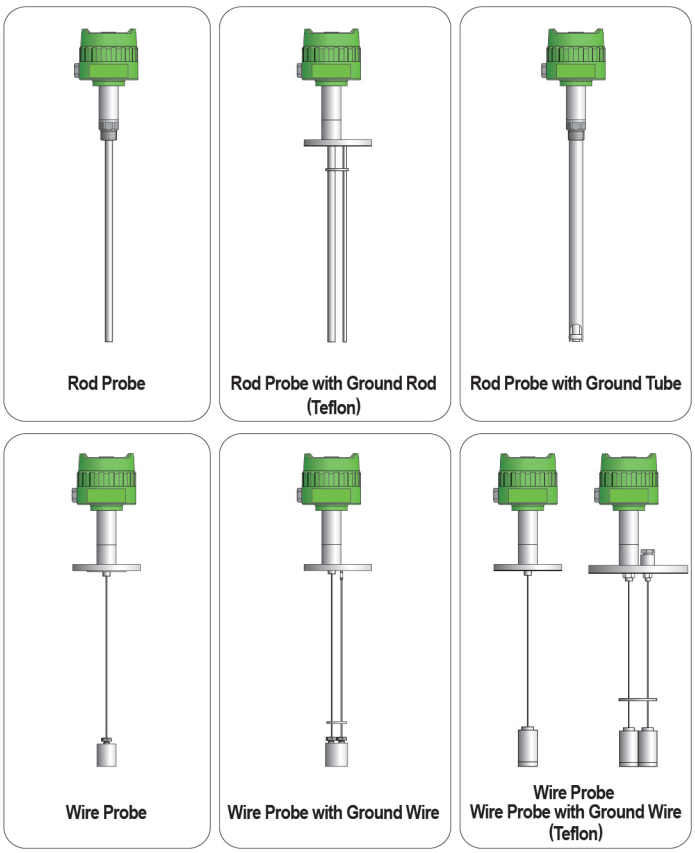

High Temperature and Ex-Proof Version

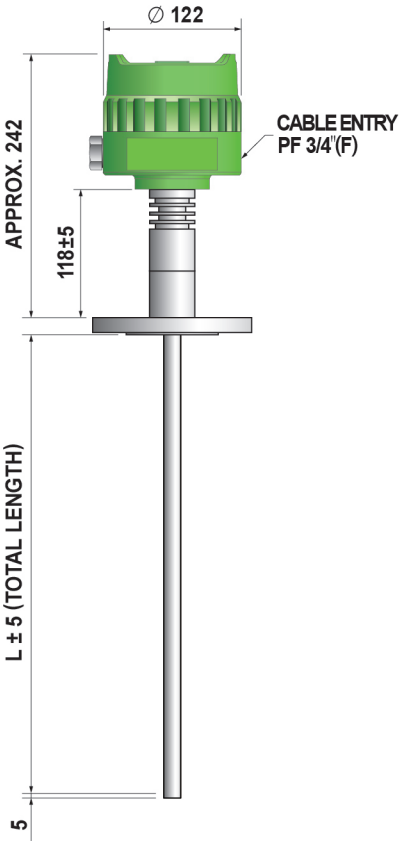

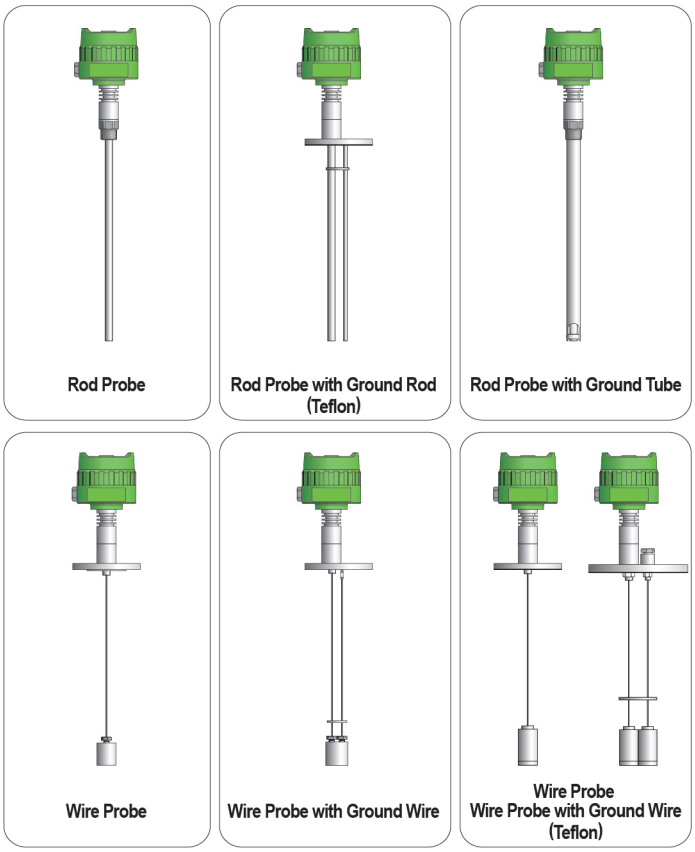

■ Actual product may have a tolerance slightly.

Installation

- Below recommendation should be considered when installation.

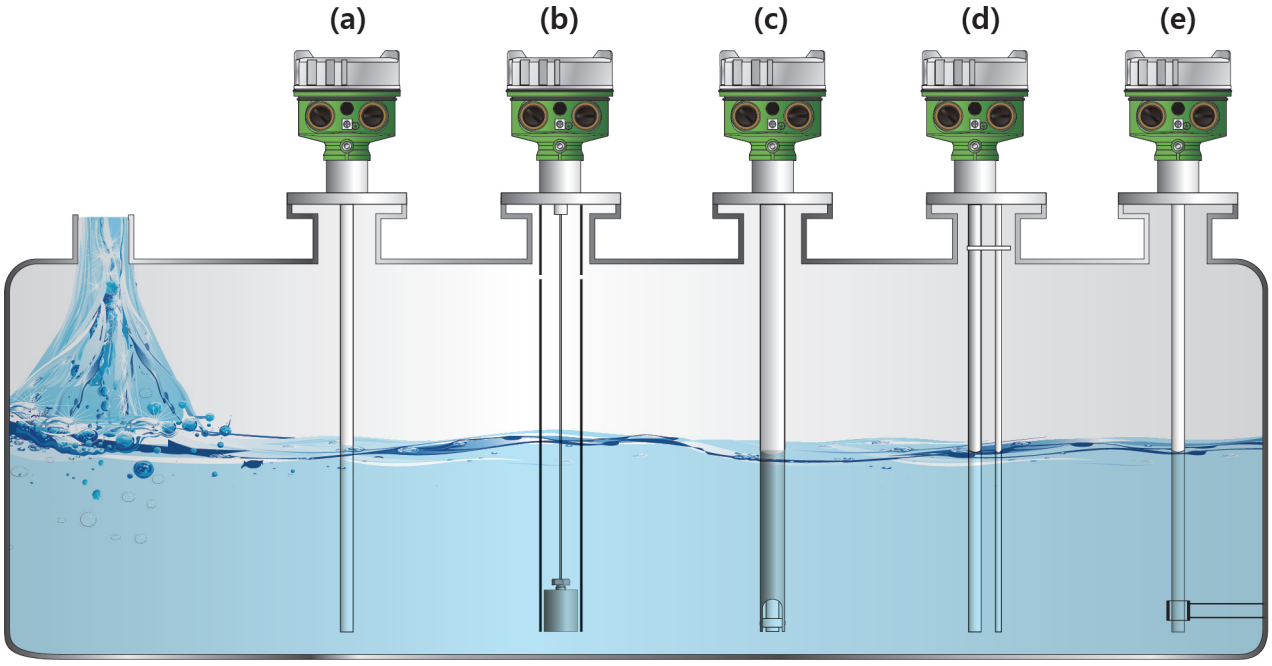

(a) Product should be installed at the place far from inlet in order to avoid the malfunction.
(b) Protection tube should be applied if there is a flow or slopping of the medium in the tank.
(c) Probe should be installed within Max. 300mm from the tank wall and ground tube type should be applied if the distance between the tank wall and sensing probe is far or the tank material is non-conductive.
(d) Ground rod type should be used for corrosive liquid.
(e) Bracket insulated to a sensing probe should be installed at the bottom of probe in order to fix it if the probe length is long or there is slopping of medium in the tank.

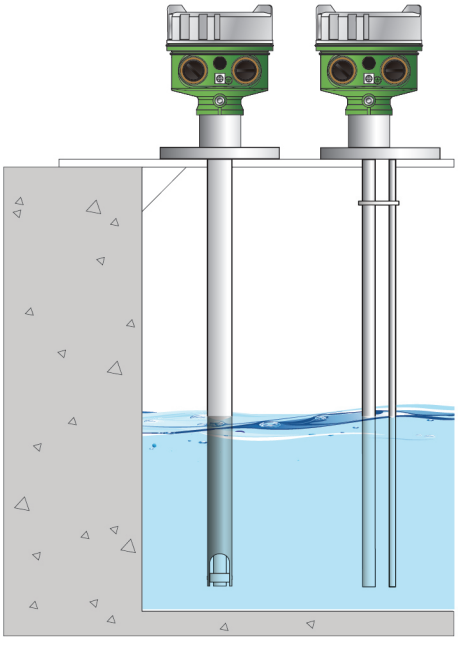

Ground tube or ground rod type should be applied for concrete or non-conductive tank as per above figure.

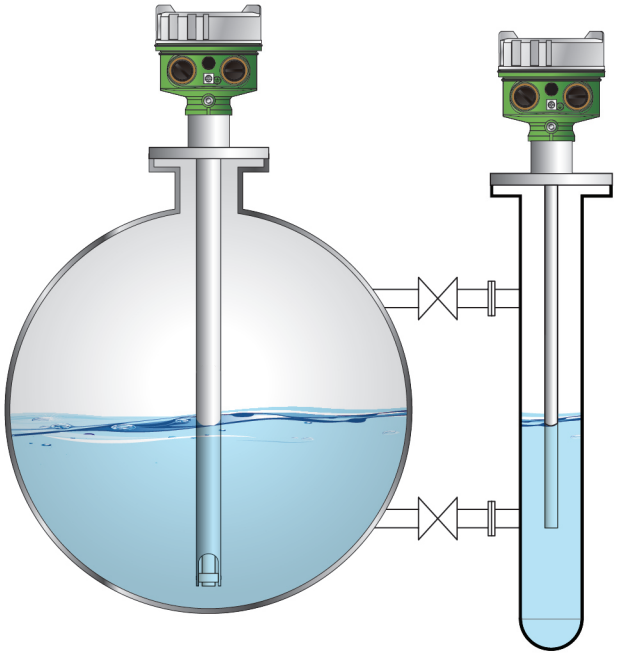

Ground tube type should be applied for ball tank and external chamber should be installed for side mounting of tank.

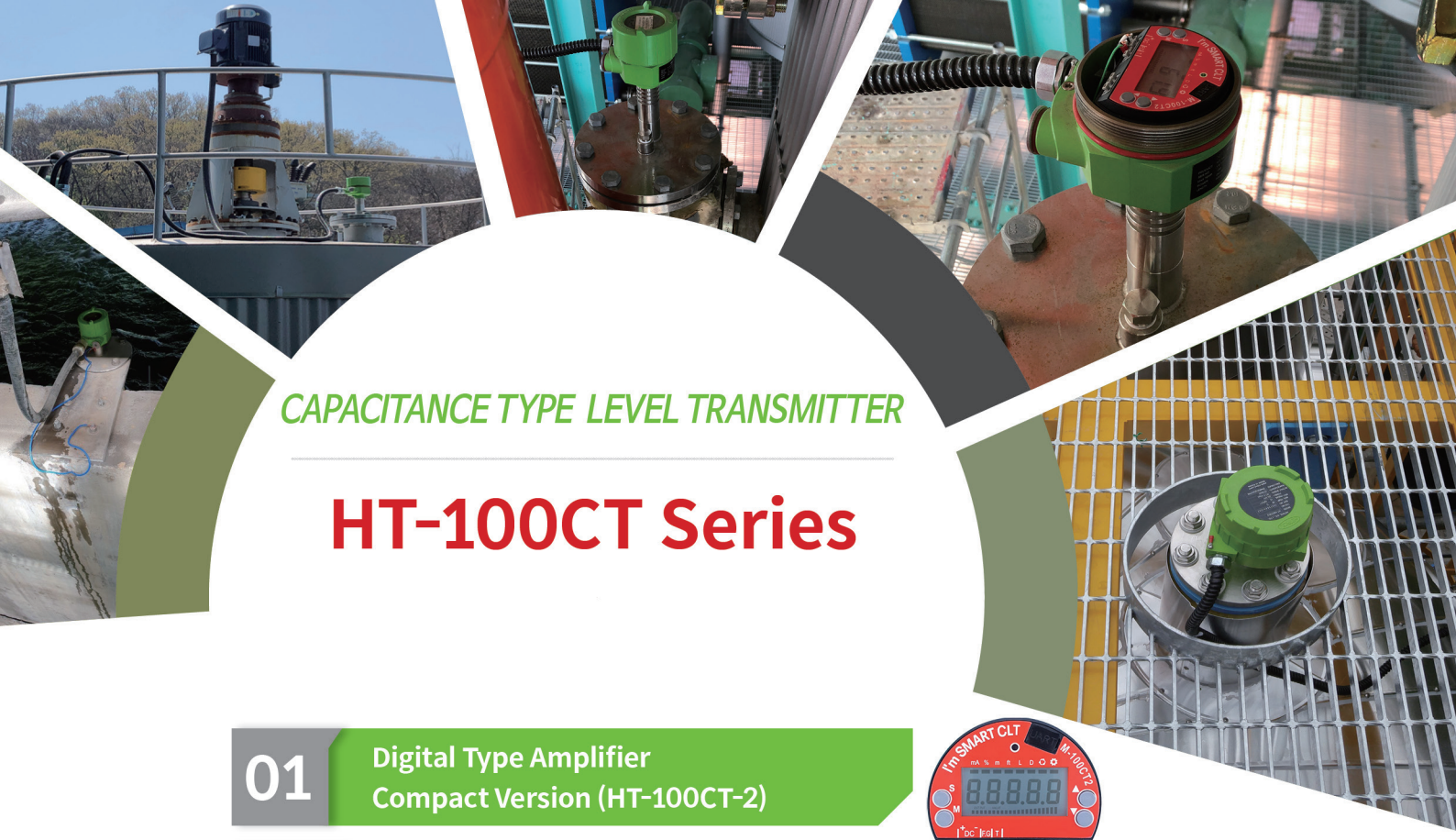

CAPACITANCE TYPE LEVEL TRANSMITTER

HT-100CT Series

01 Digital Type Amplifier
Compact Version (HT-100CT-2)

02 Various Probe Types
(Rod, Wire and Ground Probe)

03 NAMUR NE43 is applied.

04 Various Combination Unit &
Digital Indicator (HI-100D & HTA Series)



05 Convenient Product Operation Status Check!
UART MONITORING

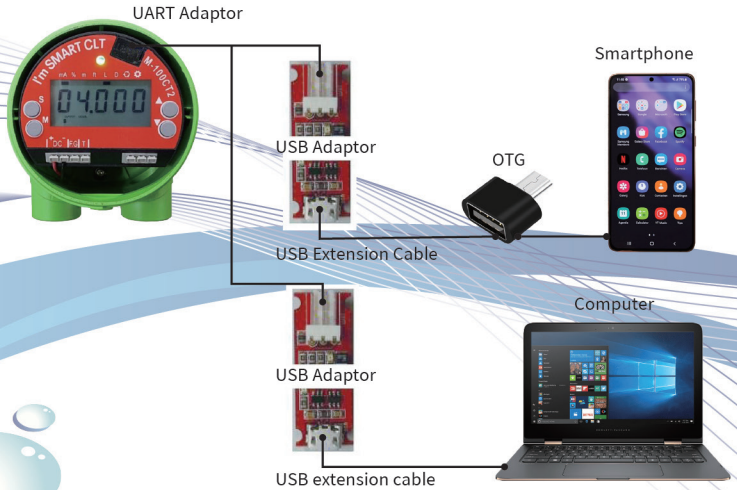

hitrol@hitrol.com | www.hitrol.com

* Design of product can be changed for upgrade without notice.