www.hkvalve.net



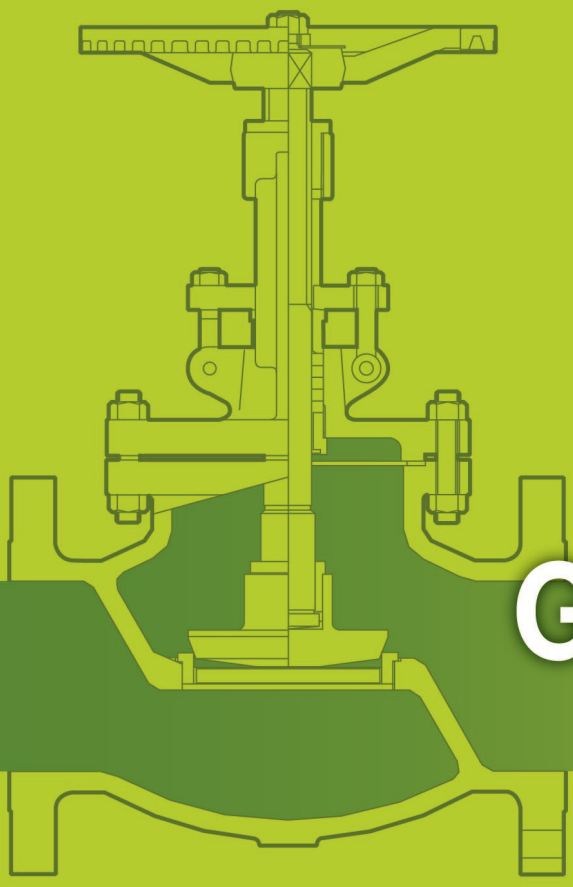

GLOBE VALVES

BOLTED BONNET

CAST CARBON STEEL
GLOBE VALVES BOLTED BONNET

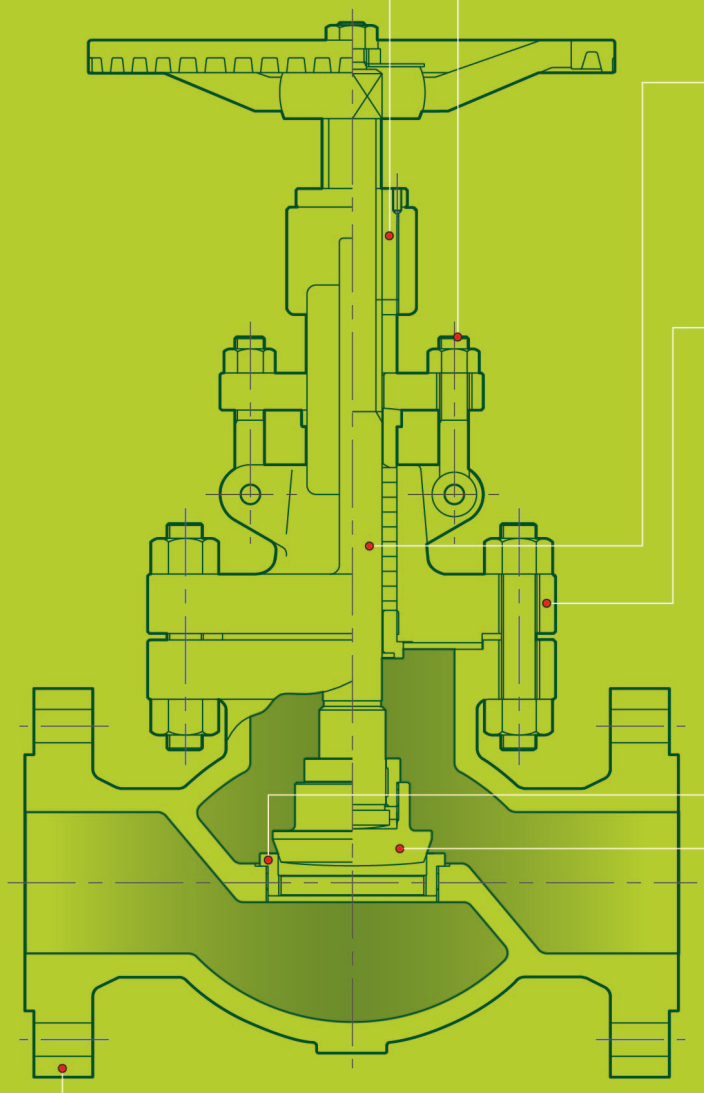

YOKE BUSH
The standard material of the Yoke sleeve is Nodular Ni-resist D2 with over a 1150°C(2100°F) dissolution point in conformity with APT Std. Specifications.

BOLTING
The body-bonnet bolts are manufactured in accordance with API Std. 600 specifications. The nuts also strictly conform with ANS B 1.1
The stud-bolt nuts, hexagonal, rigid and hot-forged, bear material notation as well as do the bolt nuts made according to ANSI B 18.2.2

STEM
The heat-treated stems of one-piece construction insure adequate mechanical properties and surface hardness. Friction at the time of opening and shutting is reduced to a minimum friction to accurate machining and lapping. The round finished surface of the stem head helps to achieve point contact with the inside of the disc housing to eliminate friction.

BONNET
The bonnet is integral or separate with yoke and is the same material as the body. The body-bonnet flange drilling is spot-faced to exactly meet stud bolt nuts. The back seat bushing in the bonnet guarantees that the packing can be replaced even when the valve is fully opened. The stem packing dimensions of the stuffing box are in accordance with API specifications.

SEAT RING
The shoulder seated type seat ring is welded or screwed into body.
The seating surface is finished by lapping. The seat ring is forged and heat-treated to deliver the best mechanical properties and required hardness. The difference in hardness between the seats and disc conforms to API Std. specifications.

DISC
The disc of our globe valve is a loose disc and can freely revolve around the stem. The prevents friction and galling with the seating surface when the valve is shut. The disc is furnished with a conical seating surface that has been ground and lapped to a mirror finish.
It is of one-piece construction, and forged and heat-treated to deliver the required mechanical properties and hardness.

BODY
The cast steel body is designed to insure a wall thickness, which is greater at any point than the minimum specified by API Std. 600. Port and seat passage dimensions conform to ANI B 16.5 Pipe fitting.
The screw-in type seat ring is standard to allow interchangeability.
The standard body-bonnet joint is male-female, and the flange is round for all valves, accurate machining insures perfect coaxially of the valve ends an seat ring in addition to exact perpendicularity of e body-bonnet flanges.

CAST CARBON STEEL

NO	NAME OF PART	ASTM SPECIFICATION						KS SPEC
		STANDARD	HIGH TEMPERATURE SERVICE				LOW TEMP. SERVICE	STANDARD
1	BODY	A216-WCB	A217-WC1	A217-WC6	A217-WC9	A217-C5	A352-LCB	SCPH2
2	BONNET	A216-WCB	A217-WC1	A217-WC6	A217-WC9	A217-C5	A352-LCB	SCPH2
3	*DISC	A217-CA15	A217-WC1	A217-WC6	A217-WC9	A217-C5	A352-LCB	SSC1
4	BODY SEAT RING	C/S1020+HF	A182-F1	A182-F11	A182-F22	A182-F5a	A182-F304	STEEL+HF
5	STEM	A276-410	A276-410	A276-410	A276-410	A276-410	A276-304	STS 410
6	DISC GLAND	A276-410	A276-410	A276-410	A276-410	A276-410	A276-304	STS 410
7	BONNET BUSH	A276-410	A276-410	A276-410	A276-410	A276-410	A276-304	STS 410
8	PACKING GLAND	A276-410	A276-410	A276-410	A276-410	A276-410	A276-304	STS 410
9	GLAND FLANGE	A105/A283-D	A105/A283-D	A105/A283-D	A105/A283-D	A105/A283-D	A105/A283-D	SF45
10	YOKE BUSH	A439-D2	A439-D2	A439-D2	A439-D2	A439-D2	A439-D2	FCD45
11	BONNET BOLT	A193-B7	A193-B7	A193-B16	A193-B16	A193-B16	A193-L7	SNB 7
12	BONNET NUT	A194-2H	A194-2H	A194-4	A194-4	A194-4	A194-4	SM45C
13	GLAND BOLT	A307.B	A307.B	A307.B	A307.B	A307.B	A307.B	SM45C
14	GLAND NUT	A307.B	A307.B	A307.B	A307.B	A307.B	A307.B	SM45C
20	HINGE PIN	A108-1020	A108-1020	A108-1020	A108-1020	A108-1020	A108-1020	STS410

NO	NAME OF PART	ASTM SPECIFICATION
15	**HANDLE NUT**	A283C
16	**SET SCREW**	A307.B
19	**HANDWHEEL**	A395
21	**PACKING**	SEE PAGE 63
22	**GASKET**	SEE PAGE 63
30	**STOPPER** for Gear	A283-D
45	**WASHER**	STEEL

* Note 1. In case of 12" and larger size, we'll use trim material overlayed one on the same or equivalent material of the Body.



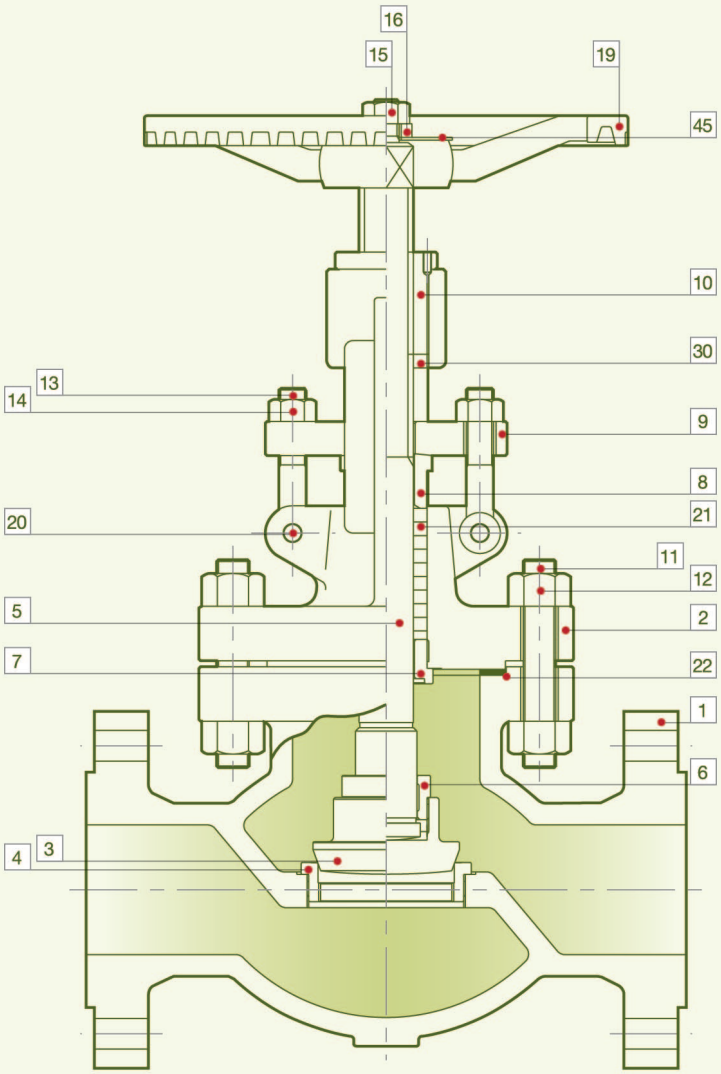

GLOBE VALVES
BOLTED BONNET
CAST STEEL

ASME CLASS 150LB

VALVE SIZE		2	2 1/2	3	4	5	6	8	10	12	14	16	18	20	24
	mm	50	65	80	100	125	150	200	250	300	350	400	450	500	600
L1 & L3	inch	8.0	8.5	9.5	11.5	14.0	16.0	19.5	24.5	27.5	31.0	36.0	38.5	38.5	51.0
	mm	203	216	241	292	356	406	495	622	699	787	914	978	978	1295
H	inch	10.8	11.4	12.5	13.8	15.6	17.3	22.0	26.4	29.1	54.7	62.6	71.7	80.7	90.6
	mm	275	290	320	350	400	440	560	670	740	1390	1590	1820	2050	2300
W	inch	7.7	7.7	8.5	9.4	11.0	11.8	14.0	15.7	17.7	22.0	22.0	24.0	27.6	27.6
	mm	195	195	215	240	280	300	355	400	450	560	560	610	700	700
L	inch	-	-	-	-	-	-	-	-	-	16.3	16.3	17.0	17.0	17.0
	mm	-	-	-	-	-	-	-	-	-	414	414	432	432	432
WEIGHT	LB	46.3	59	72.8	116.9	163.2	209.5	410.1	804.8	804.8	1364.9	1808.1	2154.3	2712.2	3472.9
	Kg	21	27	33	53	74	95	186	365	365	619	820	977	1230	1575

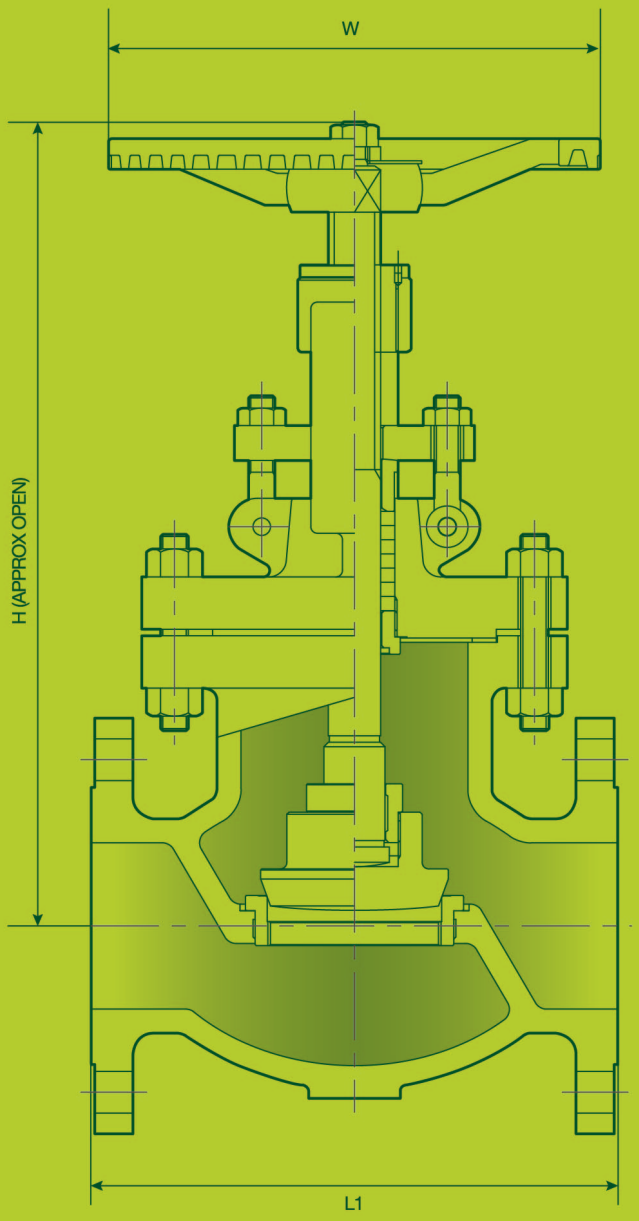

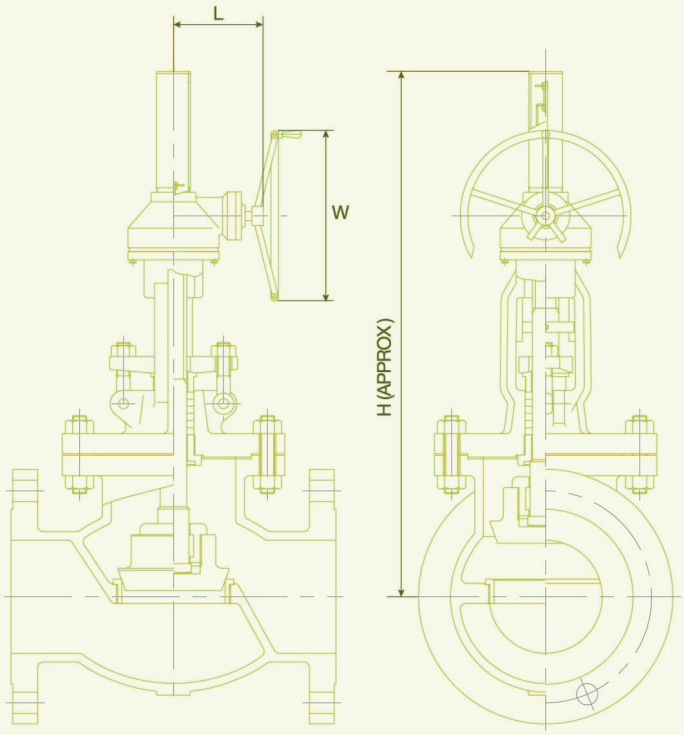

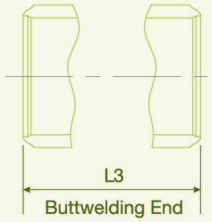

ASME CLASS 300LB

GOLBE VALVES
BOLTED BONNET
CAST STEEL

VALVE SIZE		2	2 1/2	3	4	5	6	8	10	12	14	16	18	20	24	32
		50	65	80	100	125	150	200	250	300	350	400	450	500	600	800
L1 & L3	inch	10.5	11.5	12.5	14.0	15.75	17.5	22.0	24.5	28.0	33.0	34	38.5	40	53	62.75
	mm	267	292	318	356	400	445	559	622	711	838	864	978	1016	1346	1594
L2	inch	11.12	12.12	13.12	14.62	16.38	18.12	22.62	25.12	28.62	33.6	34.6	39.12	40.75	53.88	63.4
	mm	283	308	333	371	416	460	575	638	727	854	879	994	1035	1369	1610
H	inch	14.4	15.7	16.1	18.9	26.6	27.6	29.5	31.5	37.6	54.7	62.6	71.7	80.7	90.6	122.0
	mm	365	400	410	480	676	700	750	800	955	1390	1590	1820	2050	2300	3100
W	inch	7.7	8.5	9.4	10.6	12.4	14.00	15.7	17.7	19.7	22.1	27.6	27.6	27.6	31.5	31.5
	mm	195	215	240	270	315	355	400	450	500	560	700	700	700	800	800
L	inch	-	-	-	-	-	-	-	-	-	16.3	18.4	18.14	18.4	20.7	20.7
	mm	-	-	-	-	-	-	-	-	-	414	468	468	468	526	526
WEIGHT	LB	61.7	86.0	99.2	189.6	253.6	330.8	621.8	809.2	1045.2	1907.3	2529.1	3014.2	3572.1	5159.7	7364.7
	Kg	28	39	45	86	115	150	282	367	474	865	1147	1367	1620	2340	3340

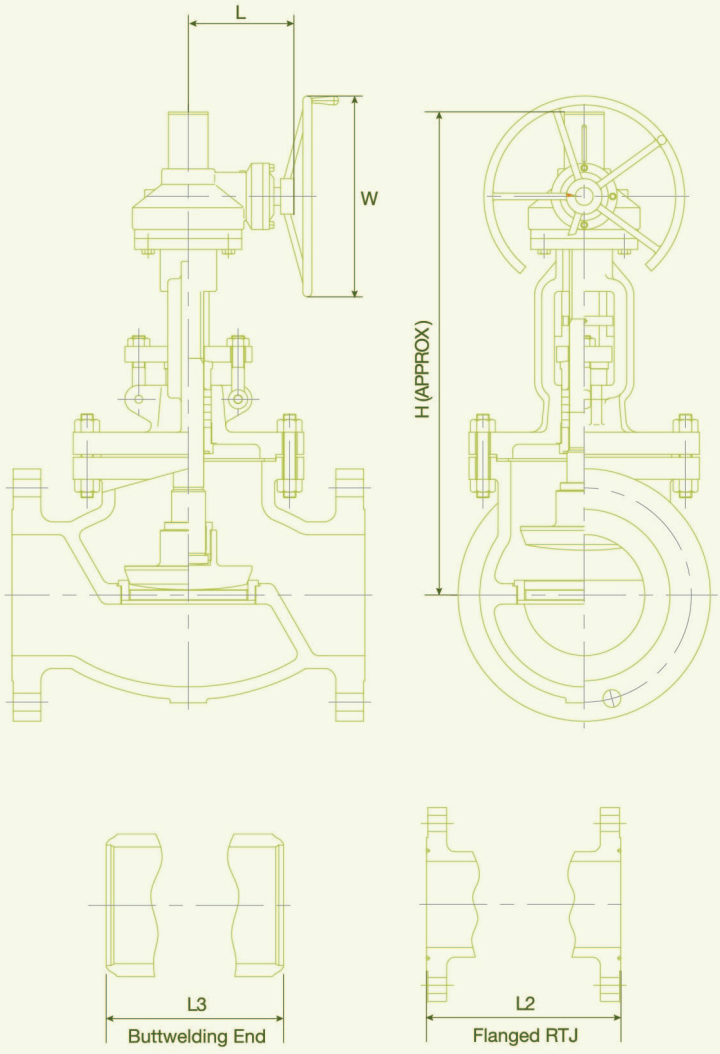

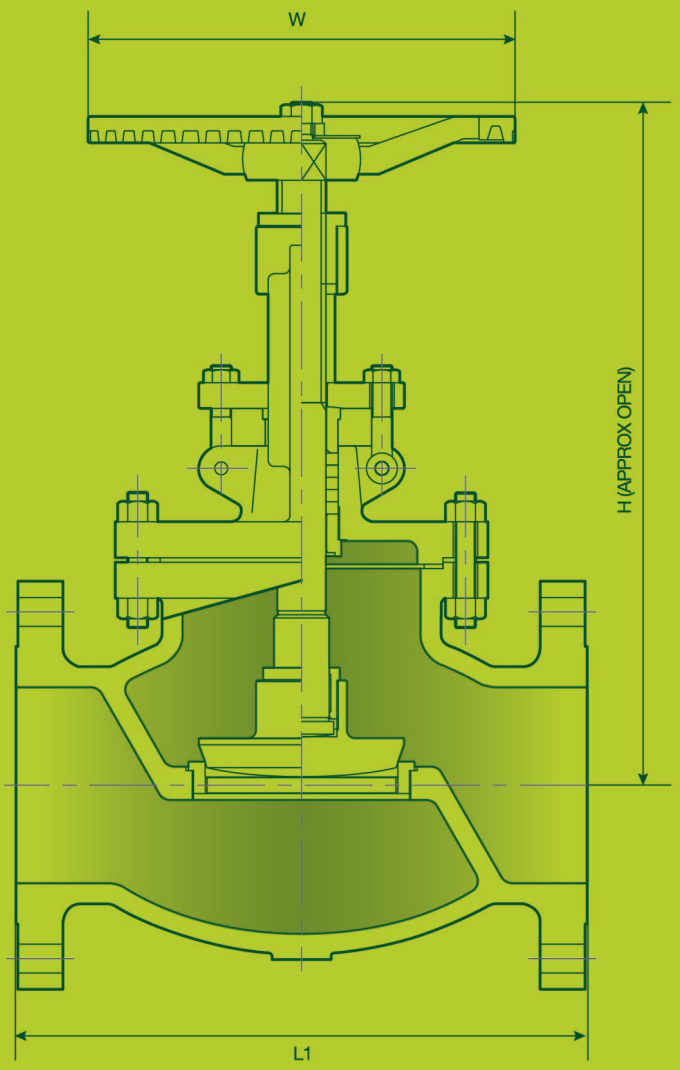

ASME CLASS 600LB

GLOBE VALVES
BOLTED BONNET
CAST STEEL

VALVE SIZE		2	2 1/2	3	4	5	6	8	10	12	14	16
		50	65	80	100	125	150	200	250	300	350	400
L1 & L3	inch	11.5	13.0	14.0	17.0	20.0	22.0	26.0	31.0	33.0	35.0	39.0
	mm	292	330	356	432	508	559	660	787	838	889	991
L2	inch	11.62	13.12	14.12	17.12	20.12	22.12	26.12	31.12	33.12	35.12	39.12
	mm	295	333	359	435	511	562	664	791	841	892	994
H	inch	16.0	19.8	19.9	22.4	31.8	37.8	51.8	59.5	96.9	70.9	76.0
	mm	407	502	505	568	807	959	1315	1511	1775	1800	1930
W	inch	7.7	8.5	10.6	11.8	14.0	15.7	28.0	31.5	35.4	35.4	35.4
	mm	195	215	270	300	355	400	710	800	900	900	*900
L	inch	-	-	-	-	-	-	18.4	20.7	26.4	26.4	26.4
	mm	-	-	-	-	-	-	468	526	670	670	670
WEIGHT	LB	114.5	141.1	187.4	330.8	511.3	714.4	1234.8	1741.9	2264.5	2932.7	3825.7
	Kg	52	65	85	150	250	324	560	790	1027	1330	1735

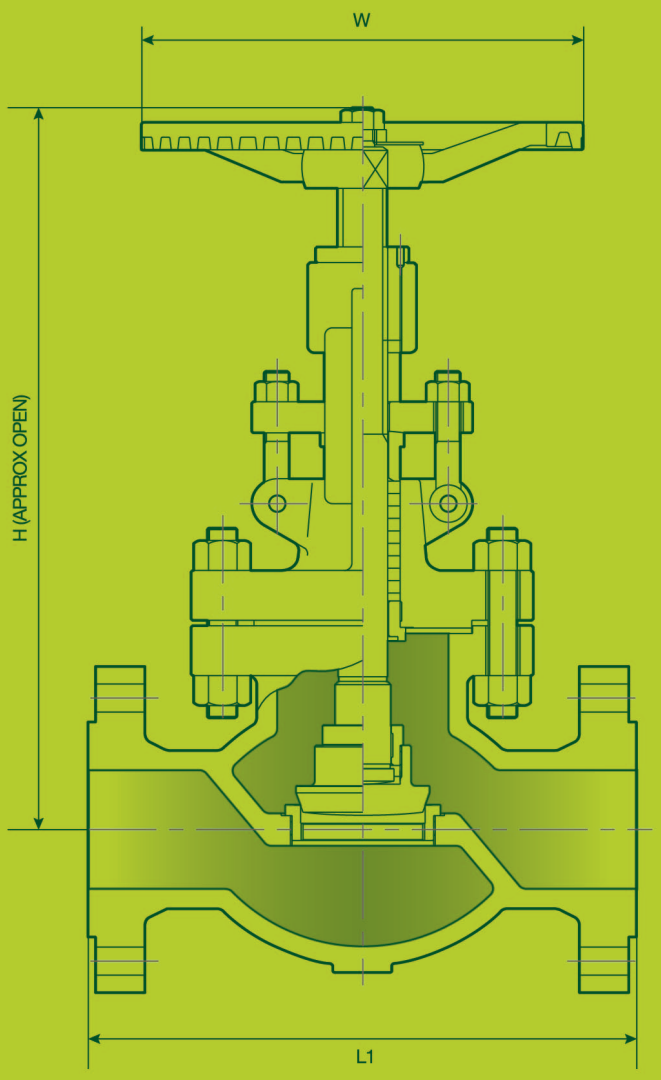

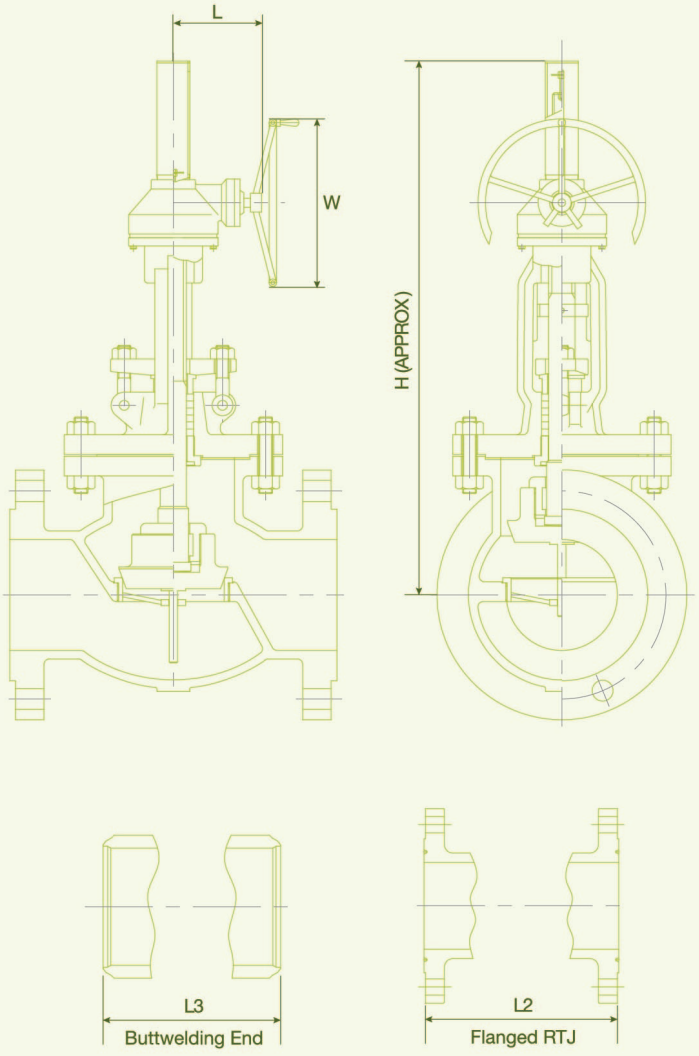

ASME CLASS 900LB

GLOBE VALVES
BOLTED BONNET
CAST STEEL

VALVE SIZE		2	2 1/2	3	4	5	6	8	10	12	14
		50	65	80	100	125	150	200	250	300	350
L1 & L3	inch	14.5	16.5	15.0	18.0	22.0	24.0	29.0	33.0	38.0	40.5
	mm	368	419	381	457	559	610	737	838	965	1029
L2	inch	14.62	16.62	15.12	18.12	22.13	24.12	29.12	33.12	38.12	40.88
	mm	371	422	384	460	562	613	740	841	968	1038
H	inch	27.4	27.4	30.5	33.7	53.1	58.6	65.69	63.0	67.1	87.0
	mm	695	695	775	855	1350	1488	1665	1600	1705	2210
W	inch	15.7	15.7	15.7	15.7	19.7	22.0	31.5	31.5	35.4	35.4
	mm	400	400	400	400	500	560	800	800	900	900
L	inch	-	-	-	-	-	16.3	20.7	20.7	26.4	26.4
	mm	-	-	-	-	-	414	526	526	670	670
WEIGHT	LB	176.4	271.2	154	441	815.9	1101.5	2756.3	4520.3	5843.3	8048.3
	Kg	80	123	161	200	370	500	1250	2050	2650	3650

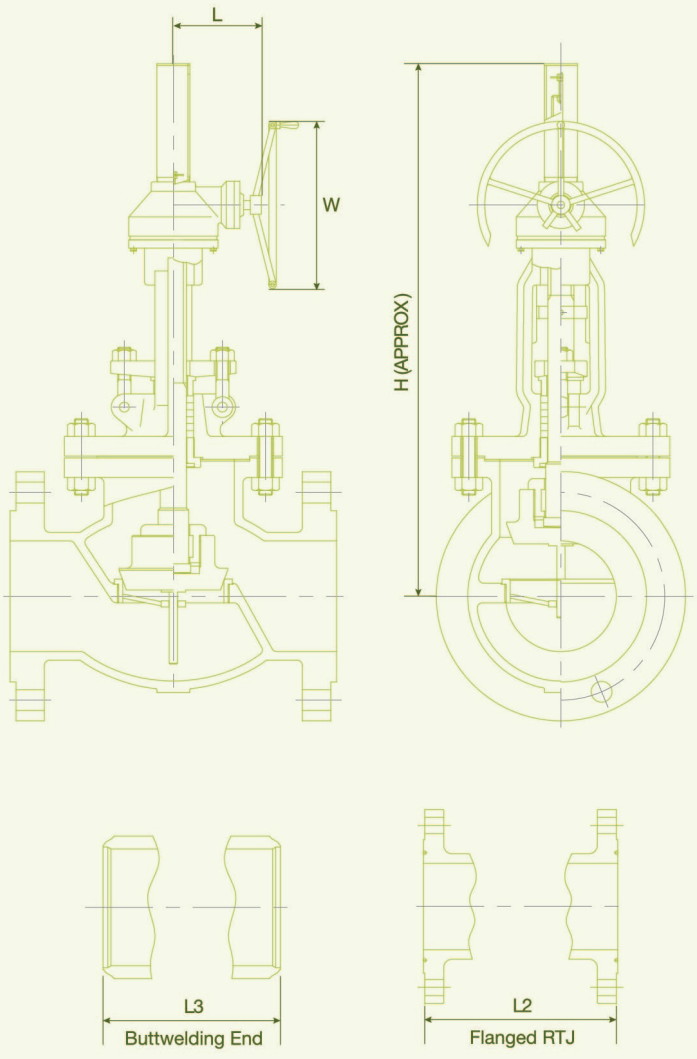

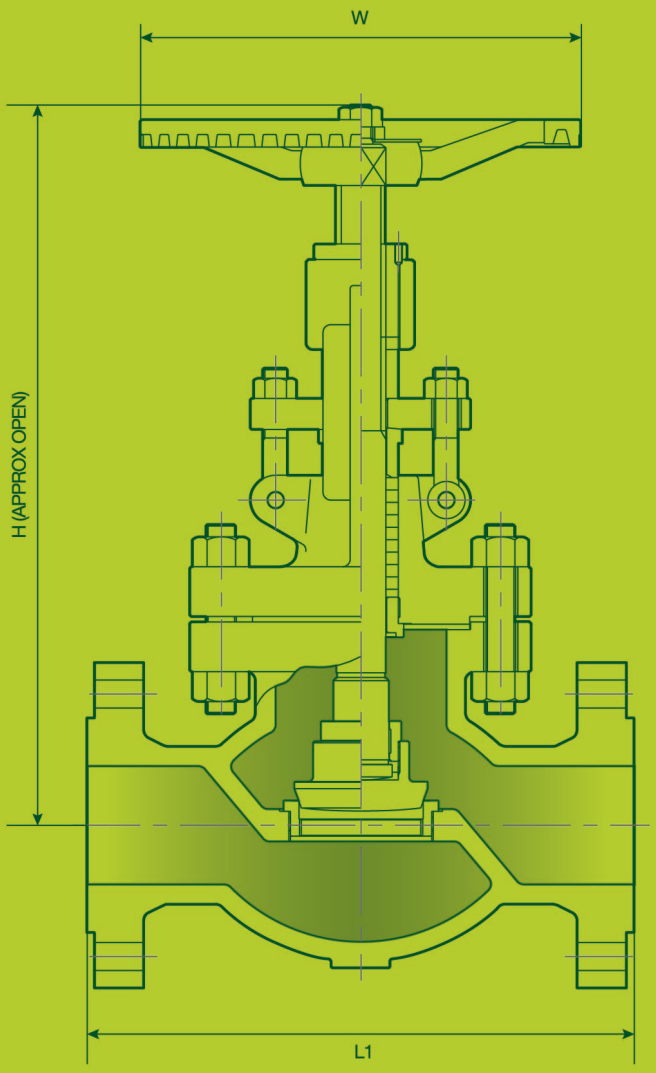

ASME CLASS 1500LB

GLOBE VALVES
BOLTED BONNET
CAST STEEL

VALVE SIZE		2	2 1/2	3	4	5	6	8	10	12	14
		50	65	80	100	125	150	200	250	300	350
L1 & L3	inch	14.5	16.5	18.5	21.5	26.5	27.75	32.75	39.0	44.5	49.5
	mm	368	419	470	546	673	705	832	991	1130	1257
L2	inch	14.92	16.62	18.62	21.62	26.61	28.0	33.13	39.38	45.12	50.25
	mm	371	422	473	549	676	711	842	1000	1146	1276
H	inch	27.4	27.4	31.5	40.0	57.1	64.8	77.2	91.0	105.1	126.0
	mm	695	695	799	1015	1450	1645	1960	2310	2670	3200
W	inch	15.7	15.7	19.7	19.7	24.8	28.0	28.0	30.0	30.0	30.0
	mm	400	400	500	500	630	710	710	760	760	760
L	inch	-	-	-	-	-	18.4	18.4	20.2	20.2	22.3
	mm	-	-	-	-	-	468	468	512	512	567
WEIGHT	LB	271.2	341.8	396.9	749.7	1124.6	1482	4630.5	7055.0	9702.0	11907.0
	Kg	123	155	180	340	510	627	2100	3200	4400	5400

