HAND THROTLLE LEVER

MODEL DSC HTL V2.0 HAND THROTTLE LEVER

Dong-Suh Control Co.,Ltd.



DESCRIPTION

The DSC HTL V2.0 hand throttle lever is non-contacted type with Hall sensor, it gives the driver more comfortable, durable reliability and stable operation by reducing noise and failure.

APPLICATION

The DSC HTL V2.0 hand throttle lever is ideal for general industrial vehicles like electrical reach lift truck.

PERFORMANCE

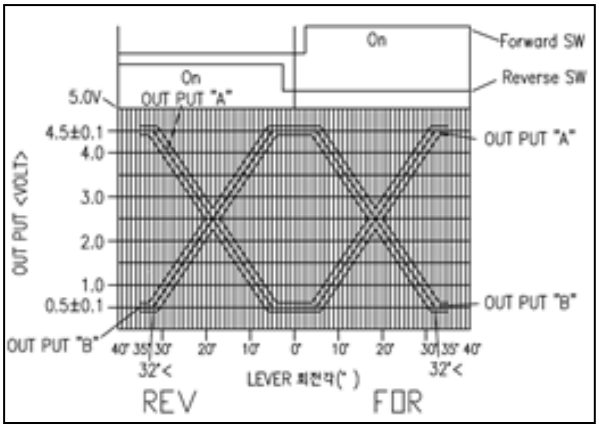

DIMENSIONS mm

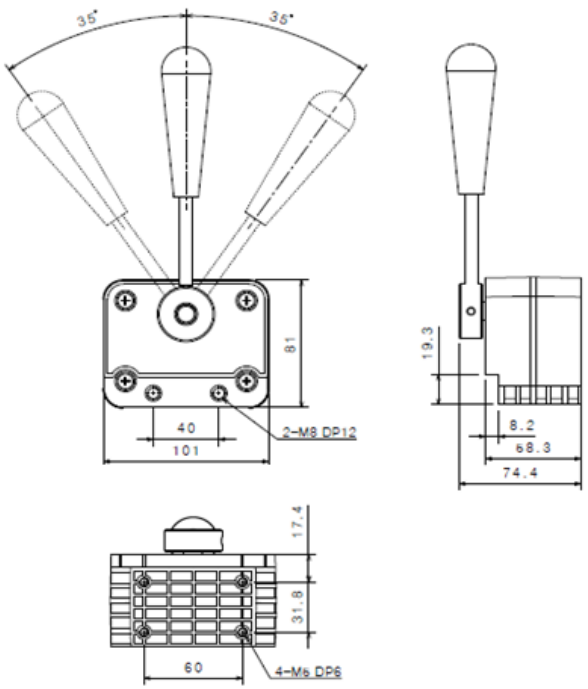

SPECIFICATIONS

- Compact design
- Smooth lever operating
- Operating voltage : 5V , 12V , 48V
- Hall sensor type
- IP65 protection rating
- Operating temperature : -40℃ to +85℃

www.dscontrol.co.kr

Note: As all contents in this catalogue is the typical information, it is subject to change without notice for product improvement and it could be different depending on the products.