PRODUCT REVIEW SHEET

IP IR Indoor Dome Camera

Design



SJ MICROTECH Co., Ltd.

Specifications

Model	**SJD21B92PIT**
Image Sensor	1/3" 2.43M Panasonic CMOS image sensor
Lens	2.8~11mm TDN DC auto iris MP lens
Minimum Illumination	0.000 Lux (IR on)
Compression	H.264/MJPEG
Max Streaming Speed	Max 30fps @ 1920X1080
Scanning System	Progressive
Bit Rate Control	VBR/CBR (H.264, 32k~12Mbps)
Standard	ONVIF(Profile S) / PSIA(v1.0)
LAN Interface	10/100-base-T
Protocol	HTTP, RTP/RTSP, TCP/IP, FTP, Telnet, RARP, PPPoE, SNMP, PAP, CHAP, DHCP, NTP, SMTP client and etc
Viewer	IE6, Firefox, Safari, etc CMS, QuickTime
Remote Admin	Web based administration, setup, control, and upgrade
Advanced Service	E-mail / FTP / Alarm buffering Event notification
Dynamic IP	DDNS / uPnP support
Security	Multilevel password channel-wise privilege
Operating Temperature	-10℃ to 50℃
Operating Humidity	10% to 90% RH
Power Supply	PoE (IEEE802.3af)
Dimension/mm	12(4W) X 101(H), Dome Φ100
Weight/g	250

Specification & Design are subject to change without prior notice

Key Features

1/3" 2.43M Panasonic CMOS image sensor
H.264/MJPEG, Dual Stream IP Camera
Max. 30fps/Full HD (1920x1080)
Remote access for Web Browser
Network Bandwidth Control
Event Alarm, e-mail, ftp Function
RTP/RTSP(Multicast)
Upgrade for Remote Access
Support ONVIF & PSIA Standards
28 pcs of IR LEDs covering 30 meters
2.8~11mm TDN DC auto iris MP lens
True Day & Night function with ICR mechanism
3-axis gimbal bracket
Weatherproof / IP-66 compliant
Onboard storage by Micro SD (option)
PoE (IEEE802.3af)

Dimensions

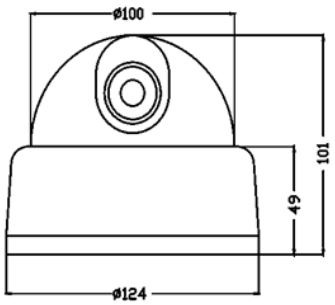

SJ MICROTECH Co., Ltd.

Copyrights© SJ Microtech Co.,Ltd. All rights reserved