Loudspeaker Specification Sheet

Model Number : BH16L016L

Revision : Rev 00.
Date : 20.JUN.17

Features:

- Driver Type : Sub Woofer
- Size : 160mm (6.3inch)
- Magnet : Ferrite
- Frame : Steel
- Diaphragm : Paper



Specifications:

- Rated Power Handling : 50W (RMS)
- Characteristic Sensitivity : 82dB ± 2dB (1W/1m)
- Nominal Impedance : 4Ω
- Free Air Resonance Frequency, fs : 75Hz ± 20%
- Frequency Range : fs ~ 5kHz ± 20%
- Voice Coil Inner Diameter : Ø30.5 (mm)
- Net Weight : 1270g (44.8oz)

Dimensions & Mounting Information:

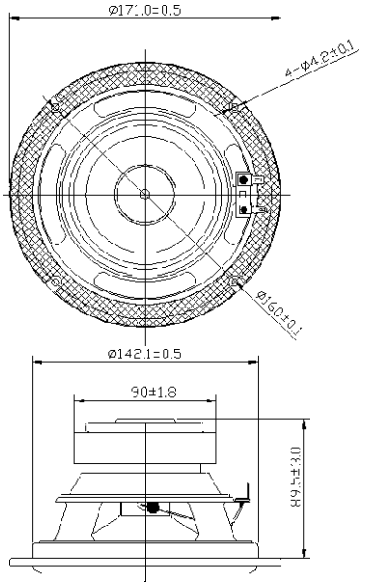

Frequency & Impedance Response:

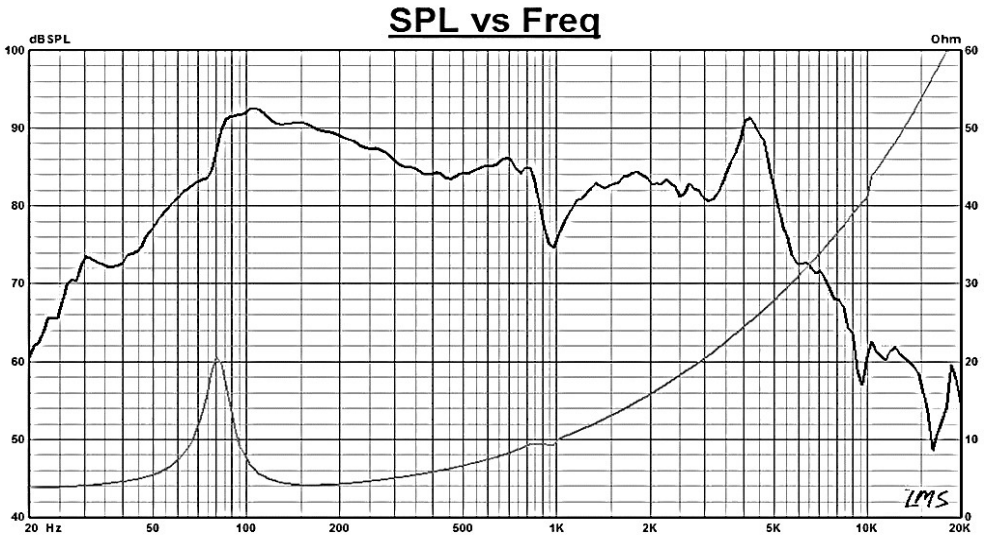

http://www.bhacoustic.com
105, Sinwon-ro, Yeongtong-gu, Suwon-si, Gyeonggi-do, Republic of Korea 16678
Tel : +82(31)-206-5477 Fax : +82-(21)-206-5473