1/2" High Sensitivity Camera

WHK-HS368

2MP x36 Zoom Hybrid(Network+HD-SDI) Motorized Zoom Laser IR Positioning Camera



Features

- 1/2" 2MP CMOS sensor
- 1080p@30/25fps, 720p@60/50fps, 720p@30/25fps
- NETWORK, HD-SDI
- x36 Optical Zoom(6 ~ 216mm) & x32 Digital Zoom
- Day & Night(ICR)
- Real-time True WDR
- Digital Noise Reduction(2D+3D)
- Digital Image Stabilizer
- 128 Presets, Tilt scan can be edited
- 360° Endless Pan Rotation
- Motorized Zoom IR Laser for IR intensity and distance adjustment
- IR Distance 500m
- Optically perfect flat viewing window preventing from blooming and smear
- -40°C~+55°C All weather High Tolerance
- Weather-proof IP66 outdoor housing
- IPv4, IPv6 Support
- Triple Stream
- H.264, MJPEG
- ONVIF compliant API
- Industry leading latency of 200ms/2Mpix Bandwidth adaptive video streaming
- Dynamic IP support
- SD/SDHC memory slot
- Bi-directional audio support

Dimensions

Unit : mm

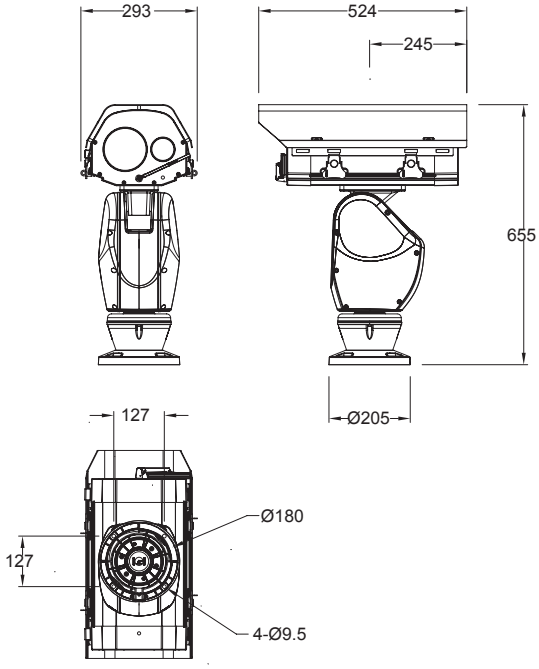

CAMERA				
Image Sensor		1/2" Sony CMOS Sensor		
Total Pixels		1952(H) x 1241(V) = 2.42M Pixels		
Active Pixels		1937(H) x 1097 (V) = 2.12M Pixels		
Video Format		1080p@30/25fps, 720p@60/50fps, 720p@30/25fps		
Min. Illumination		Color(1/30s) : 0.15 lux , BW(1/30s) : 0.01lux / 0lux(with IR LEDs)		
		Color DSS(1/7.5s) : 0.0375 lux , BW DSS(1/7.5s) : 0.002 lux / 0lux(with IR LEDs)		
S/N Ratio		more than 50dB (AGC off)		
Video Output		NETWORK, HD-SDI		
LENS		x36		
Lens Type		x36 Day & Night Zoom Lens		
Zoom Ratio		Optical x36, Digital x32 Zoom		
Focal Length		f = 6.0 mm ~ 216.0 mm		
Aperture Ratio		F1.5 (wide) ~ F4.8 (tele)		
Angle Of View (H)	WIDE	67.0°	60.0°	36.0°
	TELE	2.3°	2.0°	1.1°
PAN / TILT				
Pan		360°Continuous Pan, 0.1° to 30°/sec (proportional to zoom)		
Pan Speed		30°/sec, ± 0.1° Accuracy		
Tilt		-40° to 88° movement, 0.1°~20°/sec (proportional to zoom)		
Tilt Speed		20°/sec, ± 0.1° Accuracy		
CAMERA FUNCTIONS				
Camera Title		ID / Title / Zoom Ratio / System Message		
Day & Night		Auto / Day / Night / Ext-in		
WDR/BLC		Off / WDR / BLC / HLC		
ACE		Off / Low / Middle / High		
DNR		Auto / Off / Low / Middle / High		
Defog		Off / On(Auto / Manual)		
Digital Image Stabilizer		Off / On		
Motion Detection		Off / On (3 positions)		
Privacy Mask		Off / On (24 positions)		
Digital Slow Shutter		Off /x2 /x4		
Gain Control		Off / On		
White Balance		Auto / One Push / Manual / Indoor / Outdoor		
Shutter Speed		1/30(25) ~ 1/30,000 sec		
E.Zoom		Off / x2 ~ x32		
Digital Flip		Off / H / V / H&V		
Remote Control Interface		RS-422, 485		
Protocol		Pelco-D / Pelco- P / WONWOO		
NETWORK				
Ethernet		RJ-45 (10/100BASE-T)		
Video Compression		H.264, MJPEG		
Resolution		1920x1080,1280x960,1280x720,1024x768,800x600,720x576,640x480,320x240		
Streaming Capability		Triple streaming		
Alarm		In 1ch / Out 1ch		
Audio In / Out		Mic In / Audio Out		
Audio Compression		G.711 u-law		
Audio Communication		Bi-directional audio		
IP		IPv4, IPv6		
Protocol		TCP/IP, UDP/IP, RTP(UDP), RTP(TCP), RTCP, RTSP, NTP, HTTP, HTTPS, SSL, DHCP,		
		PPPoE, FTP, SMTP, ICMP, IGMP, SNMPv1/v2c/v3(MIB-2), ARP, DNS, DDNS		
Storage		Micro SD(SDHC)		
ONVIF		Support		
Webpage Language		Korean, English		
Web Viewer		WindowsXP/VISTA/MAC OS X		
		Microsoft Internet Explorer, Firefox, GoogleChrome, Apple Safari		
GENERAL				
Power Source		AC21~26V 60Hz / 50Hz(Power adaptor included)		
Power Consumption		AC 24V / 50W		
Protection		4000V Lightning proof, Surge proof		
Operating Temperature		-40°C ~ +55°C / 0% ~ 90% RH		
Ingress Protection		IP66		
Material		Aluminum		
Dimensions		293(W) x 655(H) x 524(D)		
Weight		15Kg		